NASA/CR—2001-210950 D950–10529–2

Onboard Inert Gas Generation System/ Onboard Oxygen Gas Generation System (OBIGGS/OBOGS) Study

Part II: Gas Separation Technology—State of the Art

Thomas L. Reynolds, Thor I. Eklund, and Gregory A. Haack
Boeing Phantom Works, Seattle, Washington

August 2001

The NASA STI Program Office . . . in Profile

Since its founding, NASA has been dedicated to the advancement of aeronautics and space science. The NASA Scientific and Technical Information (STI) Program Office plays a key part in helping NASA maintain this important role.

The NASA STI Program Office is operated by Langley Research Center, the Lead Center for NASA's scientific and technical information. The NASA STI Program Office provides access to the NASA STI Database, the largest collection of aeronautical and space science STI in the world. The Program Office is also NASA's institutional mechanism for disseminating the results of its research and development activities. These results are published by NASA in the NASA STI Report Series, which includes the following report types:

- TECHNICAL PUBLICATION. Reports of completed research or a major significant phase of research that present the results of NASA programs and include extensive data or theoretical analysis. Includes compilations of significant scientific and technical data and information deemed to be of continuing reference value. NASA's counterpart of peer-reviewed formal professional papers but has less stringent limitations on manuscript length and extent of graphic presentations.

- TECHNICAL MEMORANDUM. Scientific and technical findings that are preliminary or of specialized interest, e.g., quick release reports, working papers, and bibliographies that contain minimal annotation. Does not contain extensive analysis.

- CONTRACTOR REPORT. Scientific and technical findings by NASA-sponsored contractors and grantees.

- CONFERENCE PUBLICATION. Collected papers from scientific and technical conferences, symposia, seminars, or other meetings sponsored or cosponsored by NASA.

- SPECIAL PUBLICATION. Scientific, technical, or historical information from NASA programs, projects, and missions, often concerned with subjects having substantial public interest.

- TECHNICAL TRANSLATION. English-language translations of foreign scientific and technical material pertinent to NASA's mission.

Specialized services that complement the STI Program Office's diverse offerings include creating custom thesauri, building customized data bases, organizing and publishing research results . . . even providing videos.

For more information about the NASA STI Program Office, see the following:

- Access the NASA STI Program Home Page at ***http://www.sti.nasa.gov***

- E-mail your question via the Internet to help@sti.nasa.gov

- Fax your question to the NASA Access Help Desk at 301–621–0134

- Telephone the NASA Access Help Desk at 301–621–0390

- Write to:
  NASA Access Help Desk
  NASA Center for AeroSpace Information
  7121 Standard Drive
  Hanover, MD 21076

NASA/CR—2001-210950 D950–10529–2

Onboard Inert Gas Generation System/ Onboard Oxygen Gas Generation System (OBIGGS/OBOGS) Study

Part II: Gas Separation Technology—State of the Art

Thomas L. Reynolds, Thor I. Eklund, and Gregory A. Haack
Boeing Phantom Works, Seattle, Washington

Prepared under Contract NAS1–20341, Task 11

National Aeronautics and
Space Administration

Glenn Research Center

August 2001

Acknowledgments

The authors wish to acknowledge the help and assistance of various individuals and companies that provided data, technical information, plant tours, and meetings in support of this study.
NASA Glenn Research Center—Doug Rohn and Brian Palaszewski;
USAF/HEPR, Brooks AFB, TX—George Miller and Lt. Col. Paul Fisher;
Boeing, Long Beach—Dave Smith-Adv. C-17 Program;
Air Liquide—Karl Beers, Dennis Nolan, Oliver Vandroux, David Marchese, Ian Roman, and S. Dulkarni;
Air Products—Ted Foster, Joe Abrardo, Bob Lewis, and Push Puri;
Creare, Inc.—Marty Shimko, Dr. Pat Magari, Jay Rozzi, Bob Freudenberg (GEECO), Sandeep Verma (GEECO), Bill Buckly (R&D Dynamics), and Giri Agrawal (R&D Dynamics);
Litton Life Support—Kelly Coffield, Victor Crome, Bob Demidowicz, Alan Yoder, and Dean Cantrill; and
Valcor—Steve Etter, Gary Witts, and Haim Loran.
Their help has been invaluable in the preparation of this final report.

Trade names or manufacturers' names are used in this report for identification only. This usage does not constitute an official endorsement, either expressed or implied, by the National Aeronautics and Space Administration.

Available from

NASA Center for Aerospace Information
7121 Standard Drive
Hanover, MD 21076

National Technical Information Service
5285 Port Royal Road
Springfield, VA 22100

Available electronically at http://gltrs.grc.nasa.gov/GLTRS

SUMMARY

This purpose of this contract study task was to investigate the State of the Art in Gas Separation Technologies utilized for separating air into both nitrogen and oxygen gases for potential applications on commercial aircraft. The intended applications included: nitrogen gas for fuel tank inerting and cargo compartment fire protection and emergency oxygen for passenger and crew use in the event of loss of cabin pressure. The approach was to investigate three principle methods of gas separation: Hollow Fiber Membrane (HFM), Ceramic Membrane (CM), and liquefaction: Total Atmospheric Liquefaction of Oxygen and Nitrogen (TALON). Additional data on the performance of molecular sieve pressure swing adsorption (PSA) systems was also collected and discussed. Performance comparisons of these technologies are contained in the body of the report.

Conclusion: None of the technologies investigated except the Creare, Inc. TALON and SAFTI cryogenic systems appear to be able to meet commercial aircraft full time fuel tank inerting of all tanks. The cryogenic storage and subsequent vaporization and delivery allows achievement of peak demand conditions without considerable weight and performance penalties.

HFM technology produces nitrogen gas by passing high-pressure bleed air through very small tubular polymer fibers which are selectively coated and formed into bundles. The fibers allow Nitrogen Enriched Air (90-94% NEA) product gas to pass through the fibers and into fuel tanks, while O2, H20 and CO2 are exhaust gases. HFM systems require approximately 210 lb/minute of air at 180° F to produce 80 lb/min NEA at 30 psig feed pressure. HFM systems operating best when the inlet air is above 200 deg-F. System size and weight are a function of the number of air separation modules, plumbing, and simple controls. To inert all tanks on a large aircraft, approximately eight 12” ASMs are required to produce 11.2 lbm/min of NEA at 6.7% oxygen concentration and would require approximately 60-117 minutes would be required to fully inert the fuel tanks of a 777 size aircraft. System weight is approximately 410-600 lbs including a compressor. Electric power required is 51-121kW to produce 12-29 lb/min.

Ceramic Membrane (CM) technology, also known as Solid Electrolyte Oxygen Separation (SEOS) from Air Products, and Ceramic Oxygen Generation System (COGS) from Litton. Both companies hold patents on their respective technologies and both use different design approaches. Ceramic membrane systems enable catalytic separation of oxygen from air. The ceramic must be heated to 650-750 deg-C to activate the catalytic surfaces within the tiny ceramic pores. These active catalytic surfaces provide sites for oxygen to ionize. There is a small voltage potential across the ceramic that allows the oxygen ions migrate through the membrane and recombine into 100% pure oxygen gas molecules. The system can theoretically pressurize the oxygen gas product, to between 1000 - 2000 psi. The amount of oxygen produced is directly proportional to the surface area perpendicular to the electric field. An approximate target number for economic success is in the range of 100 watts of power for each liter of oxygen produced per minute. During the past few years, developments in design, process and materials have contributed to halving the energy requirements. This technology will probably develop into the primary oxygen system contender for small crew oxygen systems. The addition of a cryocooler or liquefaction system could allow this technology to become a contender for providing oxygen

for larger passenger aircraft. As technological advances occur, further decreases in energy requirements and improvements in separation efficiencies are possible.

Total Air Liquefaction of Oxygen and Nitrogen (TALON) of, Creare, Inc. provides cutting edge technology in air distillation columns and turbomachinery to process engine bleed air into cryogenic LOX and LNEA for storage. This system, developed under an Air Force Research Laboratory, Brooks AFB, Texas contract, specifically to meet the needs of the C-17 military transport aircraft. The TALON system uses 70 ^{o}F, and 70 psi bleed air for the distillation columns, 50 psi engine bleed air at 70°F cooling the electronics, and 50 psi bleed air at 300 ^{o}F for warming the LNEA prior to sending it to the fuel tanks. The system is complex: dual refrigeration units with a neon working fluid, LOX and LNEA distillation columns with respective re-boilers and reflux condensers, a molecular sieve inlet air pretreatment subsystem, heat exchangers and a recuperator. The system can operate in different modes, to produce LOX, LNEA, or both on demand. The power requirements for a C-17 are approximately 38kW and a target weight estimate is about 2200 lbs. The size and weight are driven principally by the military requirements for rapid tactical descent profiles and Special Operations missions. A commercial LNEA- only concept system called System for Aircraft Fuel Tank Inerting (SAFTI) has been developed for fuel tank inerting on large commercial aircraft. This system would require approximately 23kW of power and weigh approximately 550 lbs. It will produce sufficient LNEA to provide full time inerting for the heated center wing fuel tank on a 777 size airplane. The LOX capability can also be added for commercial use if desired and would afford a weight savings over conventional high-pressure stored gas systems.

Pressure Swing Adsorption (PSA) technology involves the use of zeolite molecular sieves to separate oxygen and nitrogen in bleed air. The product gas can be either nitrogen for fuel tank inerting or oxygen for breathing. If high purity oxygen (>99%) is required, a secondary carbon molecular sieve is incorporated to strip the argon from the oxygen/argon mixture. The Air Force Research Laboratory further enhanced this process with the addition of a Creare, Inc. cryocooler used to liquefy and store the LOX. The system called Advanced Hybrid Oxygen System-Medical (AHOS-M). AHOS-M was designed with a goal of providing oxygen to field medical hospitals and weighing under 600 lbs. The final system weighed 720 A PSA system sized to provide NEA to inert all tanks in a large commercial aircraft would weigh approximately 500+ lbs., require a compressor, and 136 kW of power.

TABLE OF CONTENTS

Page

List of Acronyms vii
List of Figures viii
List of Tables ix
I. Purpose 1
II. Background 1
III. Technical Approach 3
IV. Gas Separation Technology 4
A. Pressure Swing Adsorption 4
B. Hollow Fiber Membrane 6
C. Ceramic Membranes 9
D. Cryogenic Air Separation 10
E. Hybrid Separation Devices 15
F. Hybrid Applications 15
G. Nanopore Technology 16
V. Airplane Capabilities 16
A. Models Used in Study 16
B. Cargo Compartment Fire Suppression Systems 17
B.1 Introduction 17
B.2 Cargo Smoke Detection Systems 17
B.3 Cargo Fire Extinguishing Systems 17
B.4 Cargo Compartment Physical Parameters and Fire Hardening 21
C. Passenger Oxygen 21
C.1 System Description 21
C.2 Supplemental Oxygen Requirements 24
C.3 Oxygen Consumption Calculation 26
C.4 747 Oxygen System Weight 26
C.5 Oxygen Quality 28
VI. Airplane Requirements 29
A. Task 1 Study Models 29
B. Nitrogen Cargo Fire Suppression Analysis, Reference 2 29
VII. Technology Performance 36
A. Nitrogen Inerting (Fuel Tanks) 36
B. Nitrogen Inerting (Cargo Compartment Fire Protection) 38
C. OBOGGS 39
D. Special Issues 40
E. Comparative Evaluation—Inerting 41
F. Comparative Evaluation—Oxygen 43
VIII. Packaging/Installation Requirements 44
IX. Technology Readiness 50
A. Assessment of Each Technology 50
B. Service Experience 52
B.1 V-22 OBIGGS Summary 52

X. Tradeoffs 53
A. Pressure Swing Adsorption (PSA) 53
B. Hollow Fiber Membrane (HFM) 54
C. Ceramic Membranes 54
D. Total Atmospheric Liquefaction of Oxygen and Nitrogen (TALON) 55
XI. Conclusions 55
XII. References 57
XIII. Biographies of Authors 59

ACRONYMS

AHOS-M	Advanced Hybrid Oxygen System-Medical
ARAC	Aviation Rulemaking Advisory Committee
ASM	Air Separation Module
CM	Ceramic Membrane
COGS	Ceramic Oxygen Generation System
FAA	Federal Aviation Administration
FAATC	Federal Aviation Administration Technical Center
HFM	Hollow Fiber Membrane
HOTWC	Halon Options Technical Working Conference
LNEA	Liquid Nitrogen Enriched Air
N_2	Nitrogen Gas
NASA	National Aeronautics and Space Administration
NEA	Nitrogen Enriched Air
NTSB	National Transportation Safety Board
O_2	Oxygen Gas
OBIGGS	On Board Inert Gas Generation System
OBOGS	On Board Oxygen Generation System
PSA	Pressure swing Adsorption (aka, molecular sieve)
RC	Research Center (NASA-Glenn RC)
SAFTI	Safe Aircraft Fuel Tank Inerting
SEOS	Solid Electrolyte Oxygen Separation
TALON	Total Atmospheric Liquefaction of Oxygen and Nitrogen

LIST OF FIGURES

Page

1 Simplified OBOGS Operation 5
2 V-22 OBIGGS/OBOGS Detailed Schematic....5
3 State of the Art Spinning Technology 7
4 Asymmetric Composite Fiber-1500X....7
5 Complete ASM Manufacturing Capabilities 8
6 Hollow Fiber Membrane Module 9
7 Ion Transport Membranes....10
8 AHOS-M Simplified Schematic 11
9 TALON System Schematic....12
10 SAFTI Mockup Photo....13
11 SAFTI Mockup Photo....13
12 SAFTI System Schematic....13
13 Comparison of TALON and SAFTI Systems....14
14 Representative 777 Flow-Through Cargo Smoke Detection System 18
15 Isometric 777 Cargo Fire Extinguishing System Bottle Installation 18
16 747-400 Lower Cargo Compartment....19
17 747-400 Main Deck Cargo Compartment....19
18 Aircraft Descent Profiles....23
19 Gaseous Oxygen System....24
20 747-400 Oxygen Consumption Rates 27
21 Equivalent Altitude 28
22 OBIGGS Cargo Fire Suppression System Schematic 31
23 Nitrogen Knockdown With OBIGGS Control Volume Model 32
24 Typical Total Nitrogen Fire Suppression Model 33
25 Overall Nitrogen Fire Suppression System Requirements 34
26 Precooling/Recuperation Subsystem 40
27 Large Transport....45
28 Medium Transport 46
29 Business Jet....46
30 TALON System Description....48
31 TALON Subsystem Grouping Schematic....48
32 C-17 Aircraft Interfaces 49
33 OBIGGS and OBOGS Experience 51
34 V-22 OBIGGS/OBOGS Schematic 51

LIST OF TABLES

Page

1 Typical Engine Bleed Air Parameters....16
2 Cargo Fire Extinguishing Performance by Airplane Model....20
3 Cargo Compartment Physical Parameters by Airplane Model....22
4 Minimum Oxygen Required at Cabin Altitude—Per Person....25
5 747-400 Oxygen Consumption Rate Calculations....27
6 Nitrogen Knockdown and 95% OBIGGS Analysis....35
7 Nitrogen Knockdown and 98% OBIGGS Analysis....35
8 Preliminary SAFTI Sizing....37
9 ASM Technology Comparison....37

ON BOARD INERT GAS GENERATION SYSTEM/ ON BOARD OXYGEN GENERATION SYSTEM (OBIGGS/OBOGS) STUDY

Part II: Gas Separation Technology—State of the art

I. PURPOSE

The Boeing/NASA-Glenn RC Task Order Contract, Reference 1, is a NASA Aviation Safety Program funded research study to perform an assessment of advanced gas separation technologies that have potential to enhance aviation safety. The contract study, investigates technologies that address On Board Inert Gas Generation Systems (OBIGGS) for fuel tank inerting and fire protection; and for On Board Oxygen Gas Generation Systems (OBOGS) for passengers and crew use. To facilitate this study four sequential tasks were identified. These tasks are: Task 1-the identification of new and existing airplane system requirements; Task 2-an investigation of the State of the Art of gas separation technologies; Task 3-(if funded) the development of a prototype specification for an OBIGGS/OBOGS gas separation system; and if funded, Task 4 would involve the development of prototype system hardware for laboratory testing. The objective of these designs is to develop systems capable of operating on-board an aircraft to provide inert nitrogen gas for fuel tank inerting and improved cargo compartment fire suppression, and emergency oxygen for crew and passenger use.

II. BACKGROUND

Oxygen systems, as currently designed for use on commercial transport aircraft, include both passenger and crew oxygen systems for use in an emergency in the event of a sudden loss of cabin pressure. Passenger oxygen is provided from either compressed oxygen gas cylinders or from solid chemical oxygen generators. The flight deck crew oxygen systems are exclusively stored gaseous oxygen. Additionally there are on-board portable gaseous oxygen bottles in the passenger cabin available for medical use and for protective breathing equipment. Chemical oxygen generators for passengers are located in the overhead compartments above the passengers. These generators produce oxygen by chemical/thermal reaction for periods up to 22 minutes. A detailed description of commercial aircraft oxygen systems is contained in Task I contract study, Reference 2.

The carriage and use of oxygen on commercial transport aircraft is required by FAA regulations. However, oxygen in any form does pose a potential fire safety hazard because of the extremely high gas combustion temperatures that can be produced by combustible materials burning in pure oxygen or oxygen enriched atmospheres. Strict maintenance and handling procedures are required.

One part of this report will address new technologies that are being developed that are capable of producing oxygen gas on board an aircraft that could be used by a large number of passengers and crew during emergency descents. The technologies in this report can produce oxygen by any

of the three technologies addressed in this report: hollow fibers, ceramic membrane and gas liquefaction. A fourth mature technology, Pressure Swing Adsorption (PSA) has been addressed and included for baseline performance comparisons with the newer gas separation technologies. This technology has also been incorporated into “hybrid” system such as the USAF Research Laboratory’s Advanced Hybrid Oxygen System-Medical (AHOS-M) to produce and store liquid oxygen (LOX) for field hospital use.

In order to protect commercial passenger transport from the potential danger of on board fires, especially those that can ignite in inaccessible areas during flight, (such as cargo compartments), fire protection systems and design techniques have been developed to provide enhanced protection while the aircraft is in flight. Present day suppression systems rely on sealed compartments and use of a fire extinguishant, Halon 1301, to suffocate fires. However, the continued use of Halon has been banned by the Montreal Protocol because of its adverse effects on the atmospheric ozone layer. Approximately ten years of research have not resulted in a replacement agent for Halon. All alternative agents have their drawbacks; toxicity, weight, volume required for performance equivalence to halon. The University of New Mexico’s Center for Global Environmental Technologies has been in the forefront of promoting development of alternate agents, and providing the forum for exchange of information and discussion of ideas through their Halon Options Technical Working Conference (HOTWC) held annually in Albuquerque, NM.

There are two principle approaches to fire suppression: either decreasing the oxygen concentration or inerting the combustible environment. Either of these two different methods can be effectively employed for fire containment or prevention. In current commercial airplanes, the fire protection systems discharge Halon gas into a sealed cargo compartment to reduce the oxygen concentration, thus inhibiting the combustion process. After an initial “knockdown” application of a Halon 1301 fire extinguishant, additional Halon is metered into the compartment to maintain the concentration necessary to suppress / extinguish fires by chemical reactions in the fire zone for longer duration protection. This technique has proven to be highly effective against both open flame and deep-seated fires for lengthy periods and has successfully met FAA regulations for fire suppression. Any replacement agents under consideration should have standards and requirements of performance of halon as a minimum baseline.

Decreasing the oxygen concentration in air is a method used by which the oxygen level for a fire already in the process of combustion is reduced to a level where combustion can no longer be supported (suppression after combustion starts). Depending on the ignition source, this level is approximately 10-12% oxygen. Some military requirements for aircraft that may be exposed to combat have lower oxygen concentrations, in the 9-10% range for protection against high velocity incendiary ballistic rounds fired into aircraft fuel tanks.

Inerting an air volume to inhibit combustion can be accomplished by lowering the oxygen concentration by injecting an inert gas such as nitrogen or argon, (gases that will neither support nor sustain combustion) to the point whereby combustion cannot be initiated (prevention prior to combustion). Care must be exercised with a gas such as helium as testing has shown that helium, though inert, can in some cases accelerate flame spread in helium/oxygen environments, Reference 3.

This technical feasibility study is investigating two principle applications of inerting technology for commercial transport aircraft: center wing tanks (CWT) and cargo compartments. Current applications of fuel tank inerting are being used in some military aircraft and have demonstrated the potential to greatly reduce the likelihood of fuel tank explosions in combat environments.

Technologies that are being developed for separating oxygen and nitrogen gases from air are permeable membranes (ceramic and polymer fibers), pressure swing adsorption and air distillation columns, which are the subjects of this report. Gas separation devices can separate an incoming stream of air into two exit streams with the composition of one being nitrogen enriched air (approximately 95% nitrogen and 5% oxygen) and the other being oxygen enriched air. These type devices are currently in use in commercial trucks and ships to blanket fresh fruit and vegetables with nitrogen gas for longer storage life.

Most of the military aircraft in service employ similar gas separation technologies for the generation of nitrogen gas for fuel tank inerting and oxygen for crew breathing, although some older aircraft require use of stored liquid oxygen (LOX) for crew use. The military aircraft nomenclatures for these type systems are also: On-Board Inert Gas Generating System (OBIGGS) and On-Board Oxygen Generating System (OBOGS).

Another technology application for chemically generating inert gas that is quite common is evidenced by rapidly inflating automotive airbags, and nitrogen gas generators. These are pyrotechnic devices that are squib activated to produce chemical reactions that rapidly generate the desired gases. These type systems can be designed to produce large amounts of gas in a very short period of time and can activated or deployed virtually instantaneously. These type devices are not included in the body of this report but are finding design applications for rapid flooding of a contained area with N_2 or as propellant for other mediums such as water misting or inflating devices.

III. TECHNICAL APPROACH

The technical approach to performing Task 2 of this study was to identify various companies engaged in advanced gas separation technologies that were specified in the contract. On site visits and in depth discussions were arranged with each company engaged in the various gas separation technologies. This provided the opportunity to obtain first hand knowledge of the technology under development and to assess their respective manufacturing and laboratory facilities, all of which were impressive. The companies visited and the individuals contacted are listed on the reverse of the title page.

All of the companies visited provided valuable insight into their respective research and development projects, most of which are proprietary or patent covered. We have included technical data and figures where applicable and when they did not divulge protected information. We wish to express our gratitude and appreciation for their hospitality and willingness to share data on their very unique and competitive projects.

IV. GAS SEPARATION TECHNOLOGY

Air separation technology encompasses a broad range of methods, sciences, and applications, many of which are well established and have been in use for many decades. Cryogenic separation or air distillation has long been the primary method of providing nitrogen as a commodity gas to the chemical industry. For decades carrier-based Navy aircraft have been supplied with liquid oxygen (LOX) generated by shipboard cryogenic air separation plants employing specialized distillation columns designed for shipboard size constraints and as well as normal ship pitching and rolling excursions. Pressure swing adsorption (PSA) has been used for generations to remove gaseous contaminants and well as provide gas streams enriched with either oxygen or nitrogen. Over the past decade, hollow fiber membrane (HFM) technology has undergone a dramatic growth in use as an on-site source for nitrogen enriched air (NEA) for chemical, petrochemical, and food processing and transportation applications, Reference 4. There are many vendors and specialists with both general and specialized technical capabilities to design and fabricate air separation systems that can meet the most varied and unusual customer requirements. Even in the aerospace business, PSA units to provide oxygen to fighter crews have become an integral part of an aircraft model's production specification.

Besides commercial off the shelf air separation technologies in current use, there are a number of newer or evolving air separation technologies that appear to hold particular for aerospace applications. Three technologies were identified by NASA for technical assessment to determine suitability for use in future commercial aircraft. They are cryogenic separation of air into oxygen and nitrogen, hollow fiber membrane gas separation, and ceramic membranes for catalytic separation of oxygen from air. Each technology has its unique areas of strength and PSA technology can be used as a baseline technology for comparative purposes

The subject separation approaches differ from one another in the physical and chemical processes that are dominant in each. In PSA the adsorptive characteristics of particular gas species on particular solid surfaces are exploited in the separation. Ceramic membranes use high temperature surface catalytic behavior to selectively collect the oxygen constituent of air. HFM technology relies on differences in Ostwald solubility coefficients of air components to selectively remove gas species from a gas stream. Cryogenic separation relies on classical thermodynamic processes for liquefaction and distillation.

A. PRESSURE SWING ADSORPTION

In air separation using pressure swing adsorption, air is passed through a column packed with a bed of pellets or powder characterized by large surface area per unit weight of bed material. If this bed material is some form of zeolite, a Na/Ca alumino-silicate, then nitrogen from the inlet air stream will adsorb onto the zeolite surface, Reference 5, and the output gas will remain nearly free of nitrogen until all the available collection sites on the zeolite surfaces are occupied by nitrogen molecules, Figure 1. The out put gas up to that point will typically be 93% pure oxygen, but will revert to 21 percent oxygen outflow when the zeolite is saturated with nitrogen. In practice, the inlet flow will be switched to an identical but separate zeolite bed before this saturation occurs. This second bed will then provide the oxygen enriched outflow until the first bed can be reverse flow purged of nitrogen and reused in the air separation process. Thus, the air separation process "swings" back and forth between the two beds, Figure 2. In this example from

the V-22, both nitrogen and oxygen are produced, one (nitrogen) for fuel tank inerting, and the other (enriched oxygen) for flight crew use.

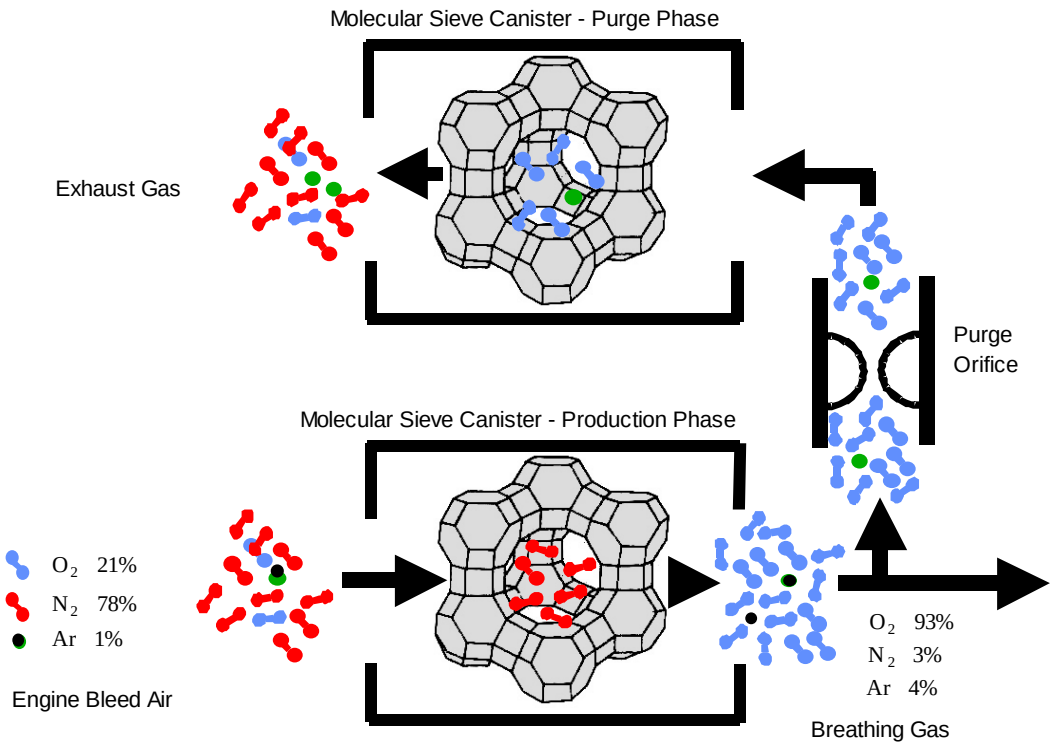

Figure 1. Simplified OBOGS Operation

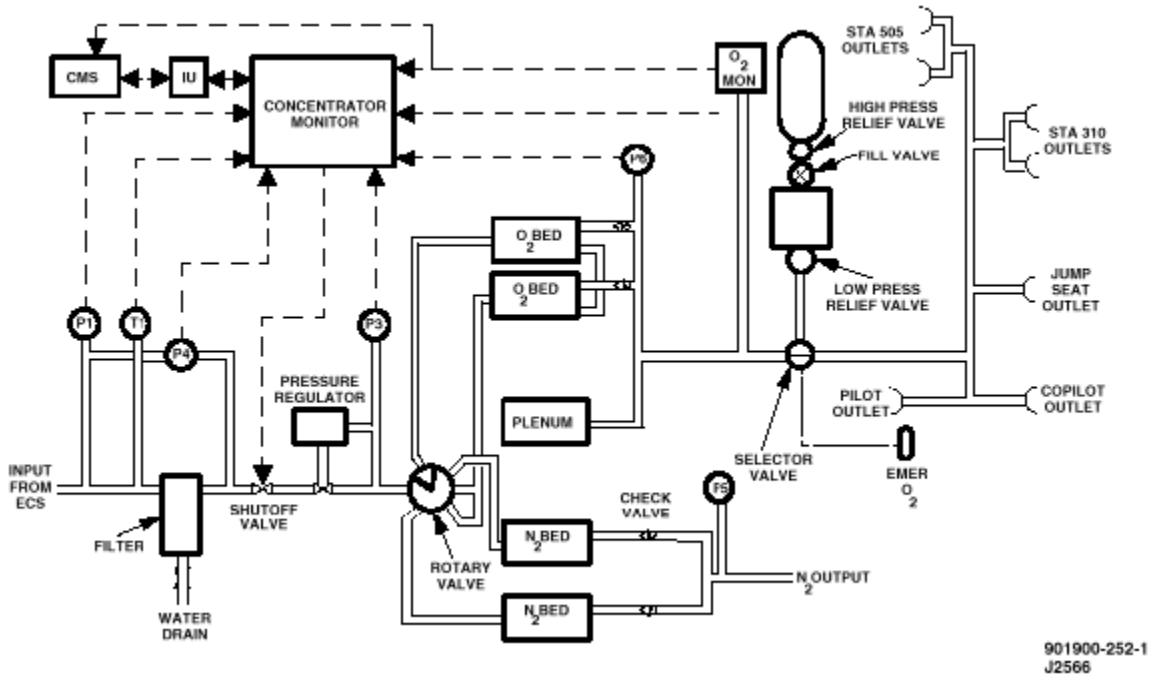

Figure 2. V-22 OBIGGS/OBOGS Detailed Schematic

Producing high purity oxygen by means of a PSA process generally involves use of a second bed with carbon as the bed material because many carbon surfaces will preferentially adsorb argon from an oxygen-argon stream. As with zeolite beds for nitrogen collection, the carbon bed will saturate with argon and the operation have to be switched to a second bed while the first bed gets purged of argon so that it can be ready for use when the second carbon bed gets saturated. The beds for the PSA systems are typically referred to molecular sieves by analogy to screen sieves that separate and collect particles by size.

The PSA units can be used in cycles where the adsorbed gas is the desired product. In the example above, nitrogen would be absorbed when air was passed through the zeolyte at high pressure. However, when the pressure was reduced during the purge part of the cycle, the desorbed nitrogen could be collected and used for an intended application such as fuel tank inerting. In this example, the oxygen-argon outlet stream would be the waste gas. In some applications the gas outputs produced from both the loading and purge cycles could be used for separate intended functions – e.g., NEA for fuel tank inerting and oxygen for crew use.

Beyond traditional airplane oxygen supply vehicles (stored high pressure gas bottles, LOX dewars, and solid oxygen generators), PSA is the only technology to have achieved wide-spread application for providing oxygen to airplane crewmembers to date, and it is the only in-use oxygen supply that employs on-site air separation. Litton Life Support is presently the dominant supplier of such PSA systems for producing both nitrogen and oxygen for military aircraft. Examples of the systems Litton has designed are illustrated in Figure 33.

In past IR&D projects, Boeing has studied the use of small PSA devices to maintain required oxygen pressures in storage tanks in commercial aircraft service, Reference 6. PSA technology can also be used to provide NEA for inerting of fuel tanks. The military C-5 aircraft set precedents in fuel tank inerting with their large stored liquid nitrogen systems. The first generation onboard inert gas generating system (OBIGGS) employing PSA systems have been deployed in the AH-64, V-22 (Osprey), and C-17 but with significant operations and maintenance problems remaining as issues of concern.

B. HOLLOW FIBER MEMBRANE

Hollow Fibers are manufactured by a process Medal calls asymmetric solution spinning. This technique is a co-extrusion like process that allows “composite-like” fibers to be formed in a continuous process, Figure 3. Permeance of gasses across a polymeric membrane is based on the solubility of the gas in the polymer as well as the rate of gas diffusion across the membrane. Polymers are selected for the membranes that are conducive for high permeance efficiency, light-weight, and reliability, Reference 7. A typical fiber is shown in magnified cross section in Figure 4 where the outside diameter of the fiber is 140-180 microns and the inside diameter is 100-120 microns.

The majority of the fiber wall thickness is a porous sponge like material that makes up the fiber core. The purpose of the core is merely to support the outer layer of the fiber that is called the sheath, the boundary layer where gas separation occurs. The sheath thickness is approximately 2 microns and it is the outer skin of this layer, measured in Angstroms, determines the performance of the membrane.

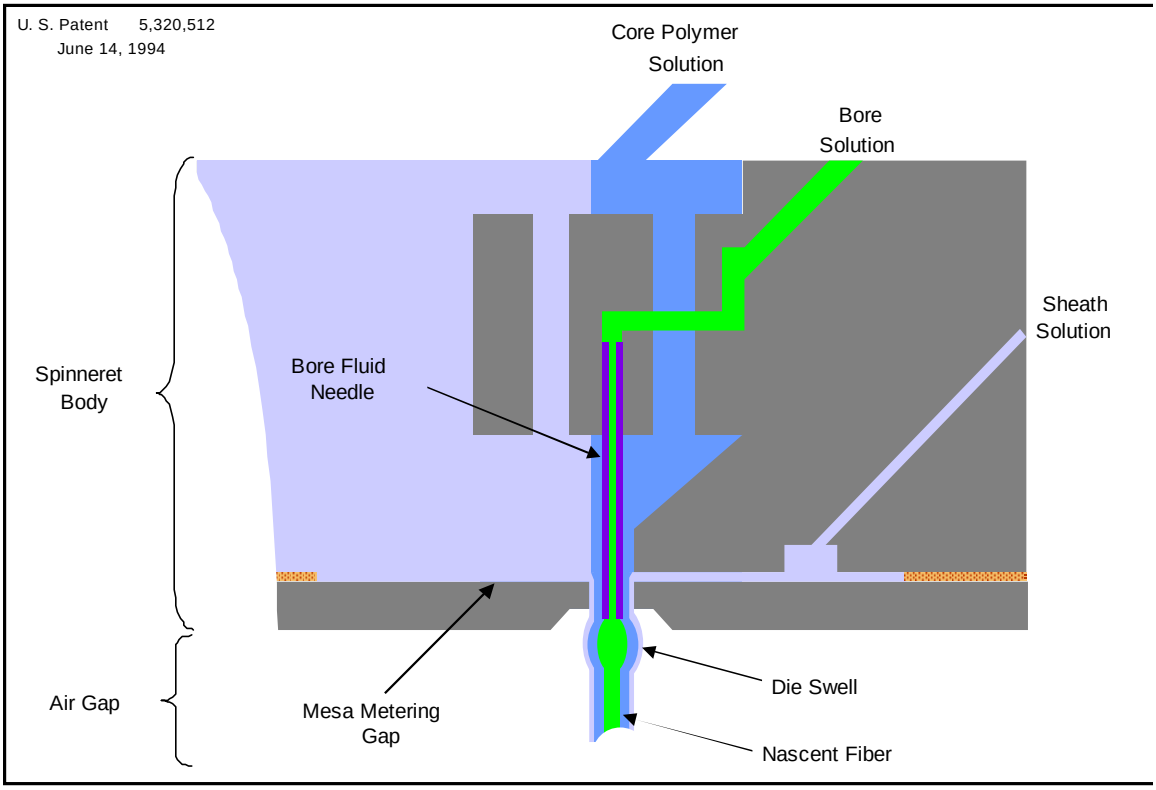

Figure 3. State of the Art Spinning Technology

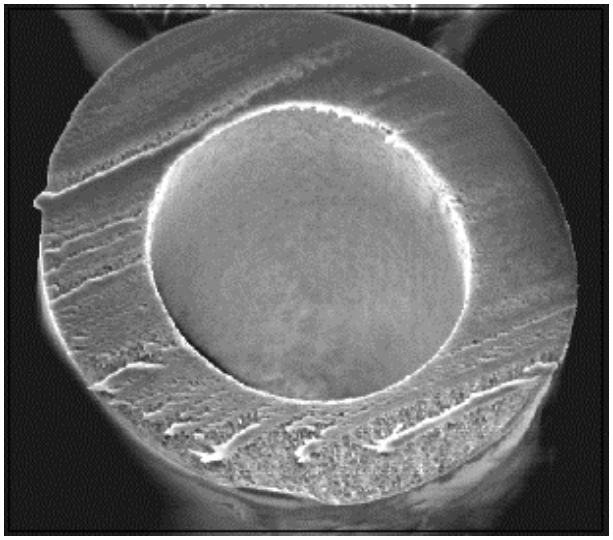

Figure 4. Asymmetric Composite Fiber-1500X

Hollow fiber membranes (HFM) are bundled together by the tens of thousands to form the bundles that make up air separation modules (ASM), Figure 5. On a single fiber basis, air is supplied at one end of the fiber. As the air moves longitudinally down the fiber, oxygen is preferentially absorbed by the polymer walls of the fiber. Due to the atmospheric pressure difference across the fiber wall, the oxygen that is absorbed by the fiber walls will tend to be desorbed when it gets to the lower pressure. The gas that exits the downstream end of the hollow fiber will have suffered a substantial decrease in oxygen concentration. Permeance of gasses across the polymeric membrane is based on the solubility of the gas in the polymer as well as the rate of gas diffusion across the membrane, Reference 8. When tens of thousands of the fibers are bundled together, each works individually as described above, and significant production rates of NEA can be had in the aggregate. A schematic of such an assembled bundle is shown in Figure 6. Advantages of HFM technology include the lack of moving parts, the low weight and inexpensive nature of the materials of construction, and the lack of any substantial time lag in system start-up. In aerospace applications, the currently involved fiber manufacturers are Permea, Praxair, and Air Liquide with system assembly being performed either by the fiber producer or other aerospace equipment maker like Valcor or Litton Life Support. In contrast to PSA, the HFM technology is suitable exclusively for NEA production from air. The ASM devices are easily able to generate NEA with nitrogen contents in the low to high ninety percentages. The waste gas oxygen concentration is generally in the neighborhood of 25 to 35%. While oxygen concentrations of up to 95% can be achieved through multi-staging and re-circulation with HFM devices, this has not proven to be a practical approach due to the cumbersome nature of the resulting assemblies. en for industrial ground installations, PSA represents a comparatively much more effective and less costly approach to separating oxygen from air. An additional problem in attempting to use the HFM waste gas stream is the adverse effects on NEA production efficiency caused by raising the back pressure on the exterior sides of the hollow fibers.

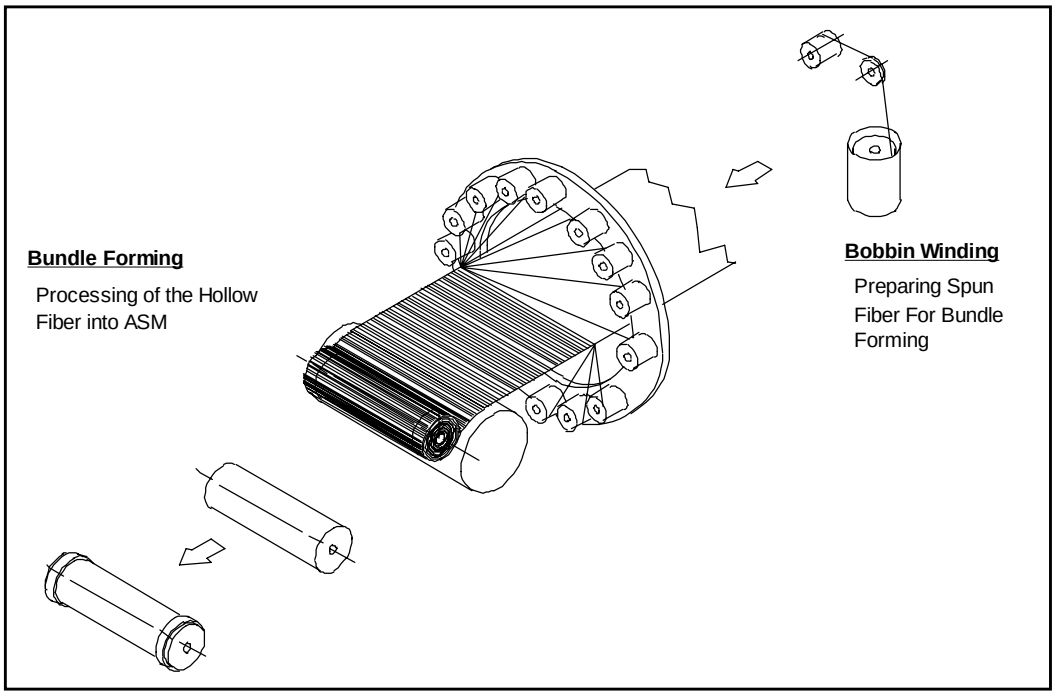

Figure 5. Complete ASM Manufacturing Capabilities

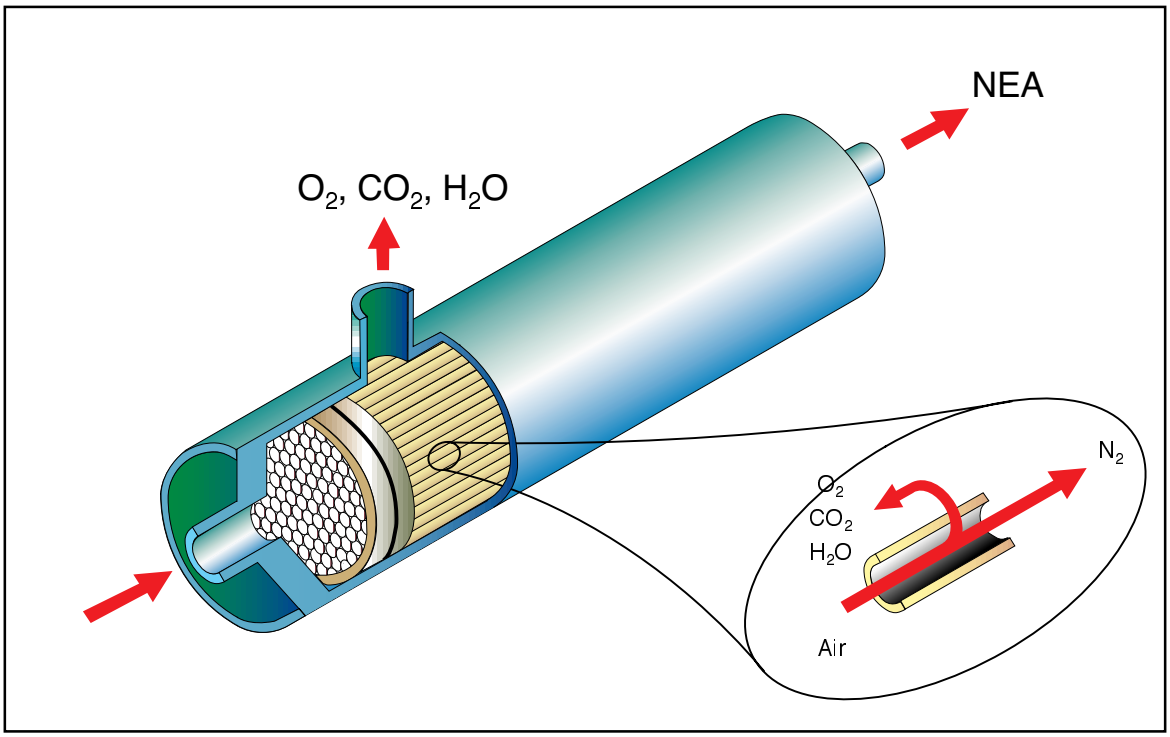

Figure 6. Hollow Fiber Membrane Module

C. CERAMIC MEMBRANES

Ceramic membranes for separating oxygen from air represent a rapidly developing technology with keen competition among rival manufacturers. This technology uses the catalytic properties of the interior surfaces of specialized ceramic materials to ionize and then separate the oxygen component from the air, Reference 9. In part because of the oxygen ionization process at high surface temperatures, the product gas from the ceramic membrane systems is virtually 100% pure oxygen with no possibility for the presence of biological or toxic chemical components. Figure 7 shows a simplified schematic of the manner in which these membranes operate. The ceramic operating temperatures are in the neighborhood of 700 °C and the electrical potential difference across the membrane is of the order of a volt. Presently, this technology goes by a variety of names – some of which are registered trademarks. Air Products and Chemicals, Inc., uses the terminology Solid Electrolyte Oxygen Separation (SEOS) and considers this technique as one subset of a number of Ion Transport Membrane (ITM) technologies. Air Liquide also uses the SEOS terminology. Litton Life Support calls its technology the Ceramic Oxygen Generating System (COGS).

When ceramic membrane devices are built in practice, they have three valuable characteristics – the first two of which are unique among air separation technologies. First, the ceramic membranes require no moving parts, and this feature has obvious reliability advantages – particularly attractive in aerospace applications. Second, the ceramic membranes are insensitive to supply air contaminants. All the other air separation technologies suffer sensitivity to one form or another of supply air contamination or moisture or the minor constituents of air. Third, the deterioration and failure of a ceramic membrane can be readily detected due to a fall-off in the pressure of the output oxygen pressure. In the typical devices built so far, these oxygen output pressures are in the neighborhood of 2000 psia.

- Electrolyte conducts O^{2-} ions
- Externally imposed DC voltage
- Electrochemical reduction at cathode
- O^{2-} transport through electrolyte
- Electrochemical oxidation at anode

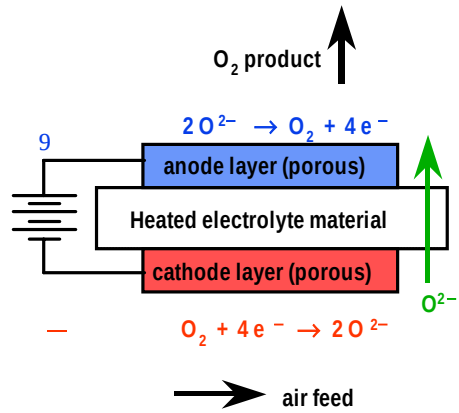

Figure 7. Ion Transport Membranes

The efficiency of ceramic membrane devices is affected by the geometry of the membranes, the solid electrolyte material constituents, the operating conditions, and the design features for supply air flow and heat transfer. Presently, the devices are heated by electrical resistance devices and this causes a time lag before a unit can be brought up to full oxygen production rates. However, future devices might use more controllable heating techniques such as focused microwaves, lasers, or acoustics. Expelling the waste heat is a design consideration that must be taken into account as well as the nitrogen rich waste gases.

Ceramic membrane systems do not have storage capabilities unless the product gas is placed in pressurized gas storage cylinders. A second option, like the other technologies would be the addition of a cryogenic cooler for storing the product gas in liquid dewars.

D. CRYOGENIC AIR SEPARATION

Cryogenic air separation for the purposes of this report means that refrigeration thermodynamic cycles and distillation, and possibly other processes are used to separate air into components so as to provide the aircraft with a source of oxygen or nitrogen enriched air either in the liquid or gaseous state. In most such applications, the air separation is enabled by the differences in boiling temperatures of oxygen and nitrogen. Use of cryogenic processes in aircraft systems has become more viable due primarily to three developments: miniaturized high speed turbo-machinery using foil-bearing technology, miniaturized distillation columns for oxygen and nitrogen, and high efficiency thermal recovery devices. There are three devices that have been developed or that are currently under development that are relevant to the purposes of this study. All are from Creare, Inc., Hanover, NH, and all have a specific purpose. Theses systems are the Advanced Hybrid Oxygen System for medical applications (AHOS-M), the Total Atmospheric Liquefaction of Oxygen and Nitrogen (TALON) system for potential use on the advanced C-17 cargo aircraft, and the Onboard System for Aircraft Fuel Tank Inerting (SAFTI) system for inerting fuel tanks of commercial aircraft.

AHOS-M is a modular, 2-man portable system that employs oxygen separation using PSA followed by liquefaction of the oxygen for storage in dewars for medical use as needed. The

development of this system by the Air Force Research Laboratory at Brooks AFB was motivated primarily by the reality that military aircraft are being transitioned from a system using ground deployed LOX for aircraft servicing to an all OBOGS service. This change has impacted the availability of LOX stores for medical use. Development work on AHOS-M has been completed and a simplified schematic is shown in Figure 8.

The TALON system is presently targeted for use on the advanced C-17. TALON will not only eliminate current reliability and performance deficiencies of the current PSA-based OBIGGS installations but also meet oxygen supply needs aboard the aircraft for special operations, medical evacuation service, and other airplane uses where oxygen must be provided for military mission requirements involving many occupants in addition to the flight crew TALON uses distillation columns, thermal recovery devices, and turbo-machinery configured in a reverse-Brayton cycle configuration to produce both LOX and liquefied NEA (LNEA). The TALON system is in the final design stage and is shown schematically in Figure 9.

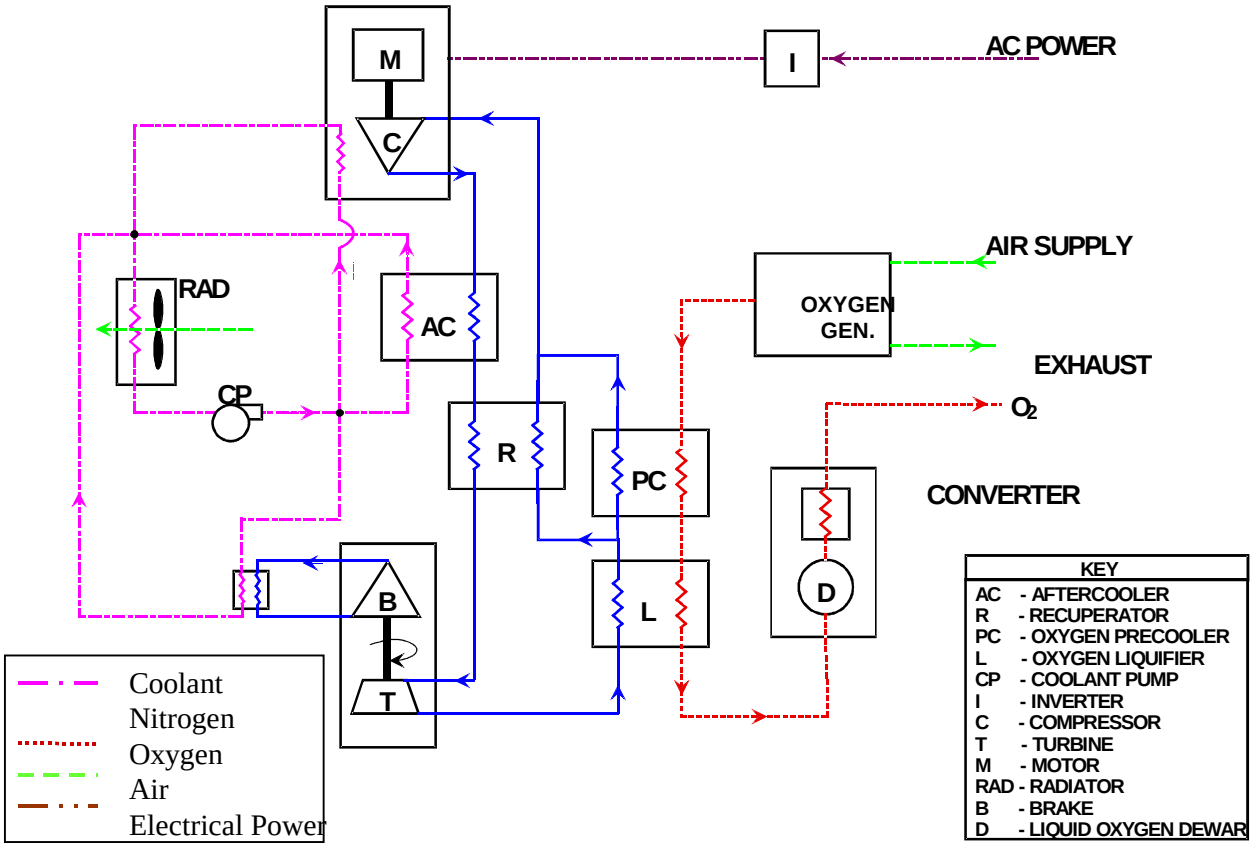

Figure 8. AHOS-M Simplified Schematic

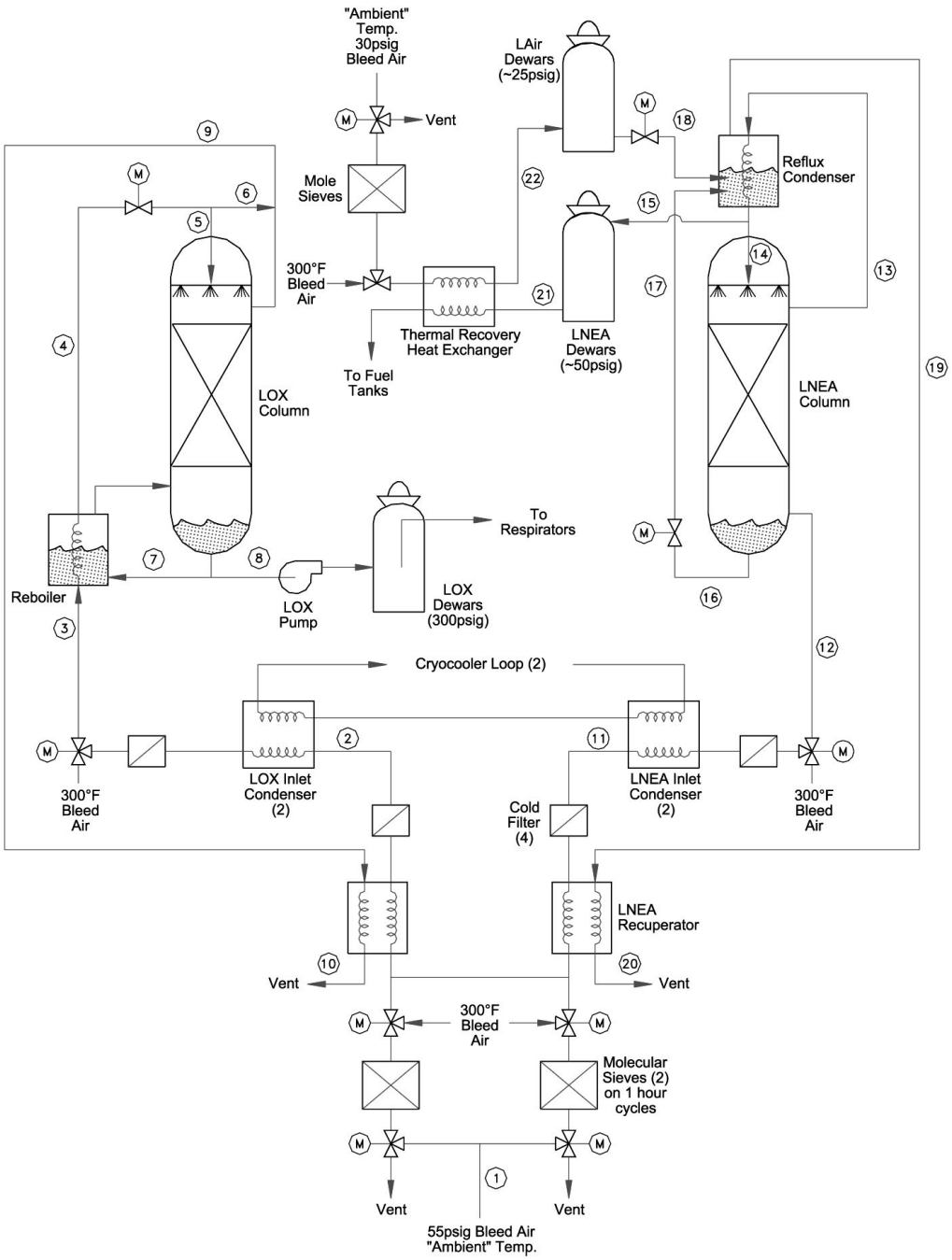

Figure 9. TALON System Schematic

SAFTI is the most recent cryogenic system proposed by Creare, and it is aimed exclusively at inerting the fuel tanks of commercial airplanes. A mockup configuration of the SAFTI system is depicted in Figures 10 and 11. SAFTI uses PSA technology to remove the H_2O and CO_2 from cabin air as part of the inlet air pretreatment that has been compressed and re-cooled as shown in Figure 12. The outflow NEA is then cooled first by a recuperator and then by heat exchange with neon working fluid cooled via reverse Brayton cycle. The NEA then goes to the distillation column and the product LNEA is sent to a cryogenic dewar for storage.

Figure 10. SAFTI Mockup Photo

Figure 11. SAFTI Mockup Photo

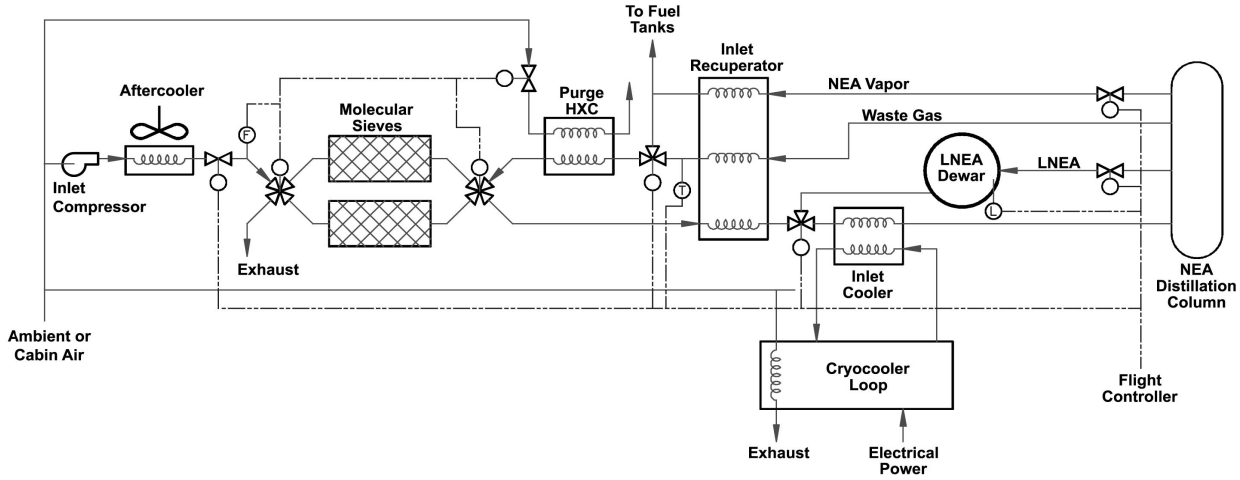

Figure 12. SAFTI System Schematic

Waste gas from the NEA distillation column is routed back through the inlet recuperator from whence it is further employed to purge the mol-sieves. NEA vapor from the top of the distillation column can be routed directly to the fuel tanks for inerting purposes. Creare's design approach for SAFTI is based on the fact that the inerting NEA volumetric rate requirements for commercial jets are much less severe than those associated with military tactical descents. Thus, using a modest LNEA storage capability, the SAFTI system can employ a small (hence, lightweight and low energy consumption) cryocooler unit operating throughout flight times of low NEA demand to build stored capacity to handle periods of high demand, i.e., taxi and takeoff. The simplified diagram in Figure 13 illustrates the differences between the militarized version of the TALON system that is capable of providing both LOX and LNEA and the commercial SAFETI system that is configured to provide only LNEA.

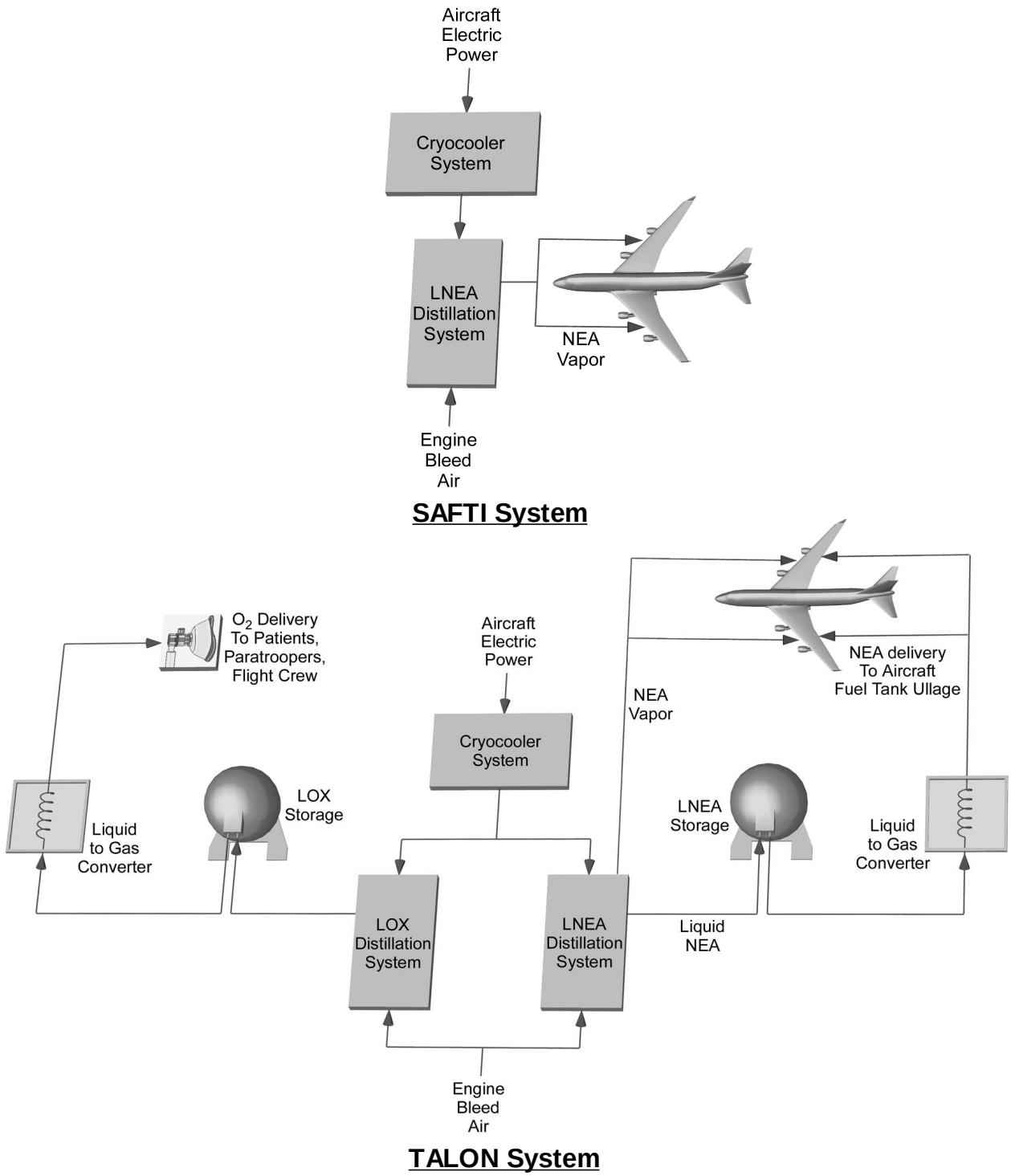

Figure 13. Comparison of TALON and SAFTI Systems

E. HYBRID SEPARATION DEVICES

The various types of air separation devices can be combined in a variety of ways for purposes of increased purity product, utilization of the waste gas stream, and compensation for or capitalization on the available inlet air temperatures and pressures. Recirculation of gas through an air separation module (ASM) can also be of potential advantage.

An example of a hybrid system would be a PSA unit in combination with a HFM device. In this case, the inlet stream would enter the HFM first and the primary product of the HFM will be NEA. If the HFM inlet pressure were higher than required for good unit efficiency, the pressure drop across the HFM device could be maintained at an optimum level by back pressure regulation of the HFM ASM. In this case the secondary waste gas could exit the HFM at a high enough pressure to be useful in a PSA device. If the desired product from this stream were oxygen, then the PSA device could take advantage of the enhanced oxygen content of the HFM waste gas. If the inlet pressure to the HFM were only marginal for NEA production, then a compressor would be needed to boost the PSA inlet gas pressure to a level satisfactory for PSA operation. The need for such supplemental gas compression would make the hybrid concept less attractive.

Generally, hybrid systems equate to less flexibility in supply air parameters, less overall system reliability, higher weight, and higher installation and maintenance costs. In aeronautical applications, the hybrid systems will make most sense when there is a large imbalance between the normal nitrogen oxygen ratio in air and the ratio of product needed to service the aircraft needs.

F. HYBRID APPLICATIONS

Hybrid applications are those where the air separation system is used in combination with another type device to achieve a desired result. An example is a cargo compartment fire suppression system that employs a water mist or pyrotechnic aerosol to initially knock down the fire and then continued metering of NEA from an OBIGGS installation to suppress the fire for the remainder of the flight. A hybrid application alluded to earlier was a trickle charge device for the high pressure oxygen bottles used in some aircraft models, Reference 6. This system used a small PSA unit followed by a compressor to provide the 99 percent pure oxygen to top off the airplane stored oxygen. The benefits of this system were to reduce the amount of ground servicing required for the oxygen system with the many attendant costs and risks associated with such maintenance and support.

Availability of cryogenic liquids on an aircraft may enable development or deployment of technologies on commercial jet aircraft that have not been possible up to now. Availability of sufficient LOX at appropriate times could permit deployment of super-efficient, lightweight APU's. The absence of nitrogen in the oxidizer supply eliminates the problem of nitrogen oxide emissions. Availability of LNEA can provide a cooling capability as well as low temperature environments that would enable high efficiency alternators and motors along with other superconductor benefits.

G. NANOPORE TECHNOLOGY

The Reference 10 issue of Journal Science reported on development work being conducted by the Department of Energy's Scandia National Laboratories, using ultraviolet beams of light to provide precise size adjustments in the pores (nanopores) of membranes and the crystalline structures of zeolites. The multi-institutional development work is being performed under the leadership of Dr. Jeffery Brinker. His teams work has been published as a four-paper series in the journal Nature detailing their inquiries into the properties of nanostructures that self assemble to produce repeating patterns of pores of exactly the same size. The honeycomb-like structures have pores that shrink in unison when illuminated by the ultraviolet beam of light.

By being able to "tune" membrane and crystalline structures will enhance the capabilities of the membranes to optimize separation of oxygen and nitrogen. Initial application of this new nano-technology is for sensor arrays, nanoreactors, photonic and fluidic devices, and low dielectric-constant films.

V. AIRPLANE CAPABILITIES

A. MODELS USED IN STUDY

The aircraft used in this study included the current in-production fleets of Boeing aircraft. Additional data and information from the ARAC II committee investigations include Airbus as well. These data were drawn from studies that were comprised of the 737, 747, 757, 767, and 777 from the Boeing fleet and the A300, 310, 320, 330, and 340 from the Airbus fleet, Table 1.

This data is typical of most transport aircraft as the bleed flow is primarily used to pressurize the cabin to the desired pressure altitude and to provide conditioned air in the cabin for passenger comfort. This requires a minimum flow per passenger of 10 cubic feet per minute to ensure fresh air in all parts of the cabin. Extensive analysis using Computational Fluid Dynamics is employed in development and analysis of cabin air flow requirements. In addition, air flow is provided to the cockpit to maintain a positive (out flow) of air from the cockpit and to provide cooling for the avionics. The air flow into the cockpit can range upwards of 70-80 cubic feet per minute per cockpit occupant.

The following tabulations are fairly representative of the pressure, temperatures and flow rates available during the noted stages of flight.

Table 1. Typical Engine Bleed Air Parameters

Mode	Location	Pressure (psia)	Temperature (ºF)	Flow (pounds/sec)*
APU	Ground	25-54	235-430	1.6
Eng Idle	Ground	45	350-380	1.9
Climb	Flight	40-55	330-380	1.6
Cruise	Flight	25-40	350-380	1.7
Idle Descent	Flight	20-35	350-380	1.5

* Single engine

Variations in pressure and temperature occur due to altitude, outside air temperature, and the number of bleed ports and air conditioning packs in operation.

B. CARGO COMPARTMENT FIRE SUPPRESSION SYSTEMS

B.1 Introduction

Boeing airplanes use Halon 1301 (bromotrifluoromethane) as the extinguishing agent in their cargo compartment fire suppression systems. As a result of the Copenhagen Amendment to the Montreal Protocol, production of Halon 1301 has ceased as of December 1993, and commercial use is prohibited except in those areas deemed critical such as in airplane fire suppression systems. To assess alternative agents for application in airplane fire extinguishing systems, the air transport industry, including manufacturers, airlines, regulatory agencies, and interested academia, formed the International Halon Replacement Working Group (IHRWG). As of this writing, there is no apparent, immediate replacement for Halon 1301 for large commercial airplane applications that is not cost and weight prohibitive or that is not toxic. Part of this study includes consideration of NEA as one potential alternative to Halon 1301: the Onboard Inert Gas Generation System, better known by its acronym OBIGGS.

B.2 Cargo Smoke Detection Systems

Both Class B and Class C cargo compartments require and are designed with smoke detection systems. All Boeing models excepting the 737 utilize flow-through smoke detectors in the cargo compartment smoke detection systems. The 737 airplane models use area smoke detectors. A flow-through detection system consists of a distributed network of sampling tubes, which bring air sampled through various ports in the cargo compartment ceiling to smoke detectors located outside the cargo compartment and then exhaust the air. An area detection system consists of smoke detectors installed in various locations in the cargo compartment ceiling.

Once smoke is detected by either type of system, aural and visual alarms are annunciated in the flight deck. A light on the applicable fire extinguishing arming switch is illuminated in the airplane flight deck and an engine indicating and crew alerting system (EICAS) message is displayed, alerting the flight deck crew to the cargo compartment fire. A typical flow-through smoke detection system is schematically represented in Figure 14.

B.3 Cargo Fire Extinguishing Systems

Boeing airplane cargo fire extinguishing systems provide minimum Halon 1301 concentration coverage for 1 hr or more, depending on the airplane model. Discharge of the cargo fire extinguishing system is initiated by the pilots. Typically, the cargo fire extinguishing systems have an initial knockdown discharge and then a metered discharge of Halon 1301. The respective cargo compartments utilize common bottles for both the knockdown and the metered systems. The Halon can be discharged into one compartment or the other. There is not sufficient Halon to provide adequate fire protection to both compartments simultaneously, nor is there a requirement to fight a fire in both compartments simultaneously. The probability of a cargo fire in one compartment is highly improbable and the likelihood of two simultaneous fires is even less likely. The probability there would be a cargo fire in each compartment on the same flight is less than extremely improbable. Figure 15 provides a visual overview of an airplane's fire extinguishing system. Figures 16 and 17.

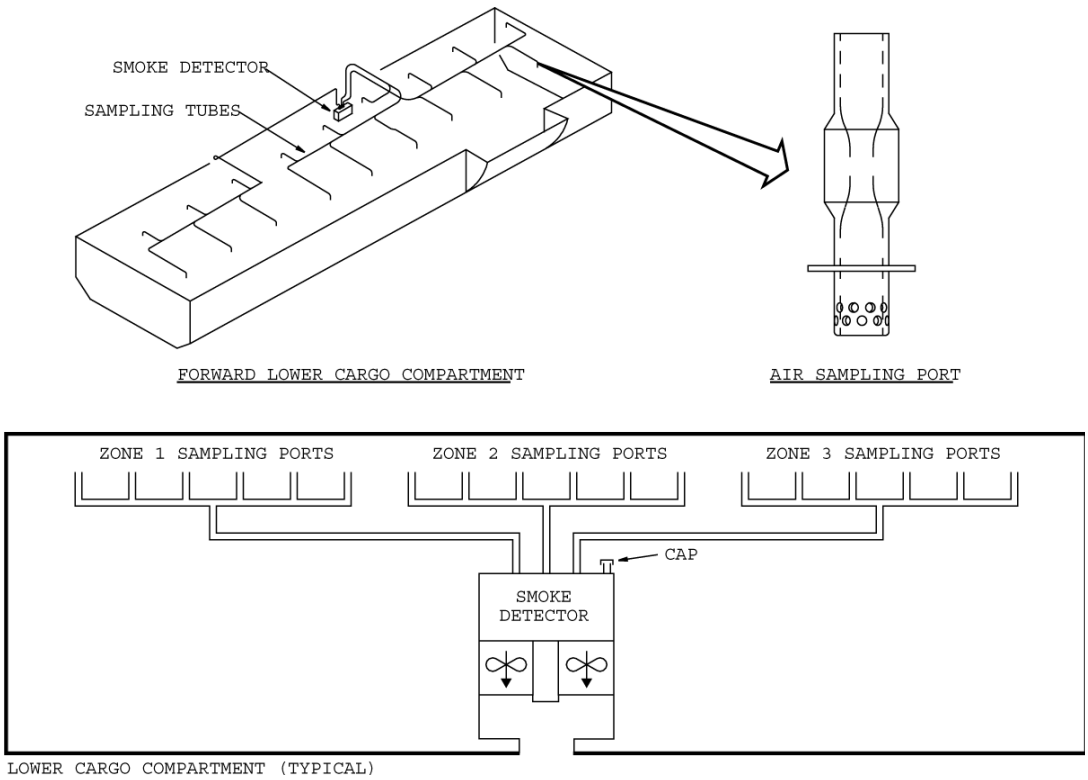

Figure 14. Representative 777 Flow-Through Cargo Smoke Detection System

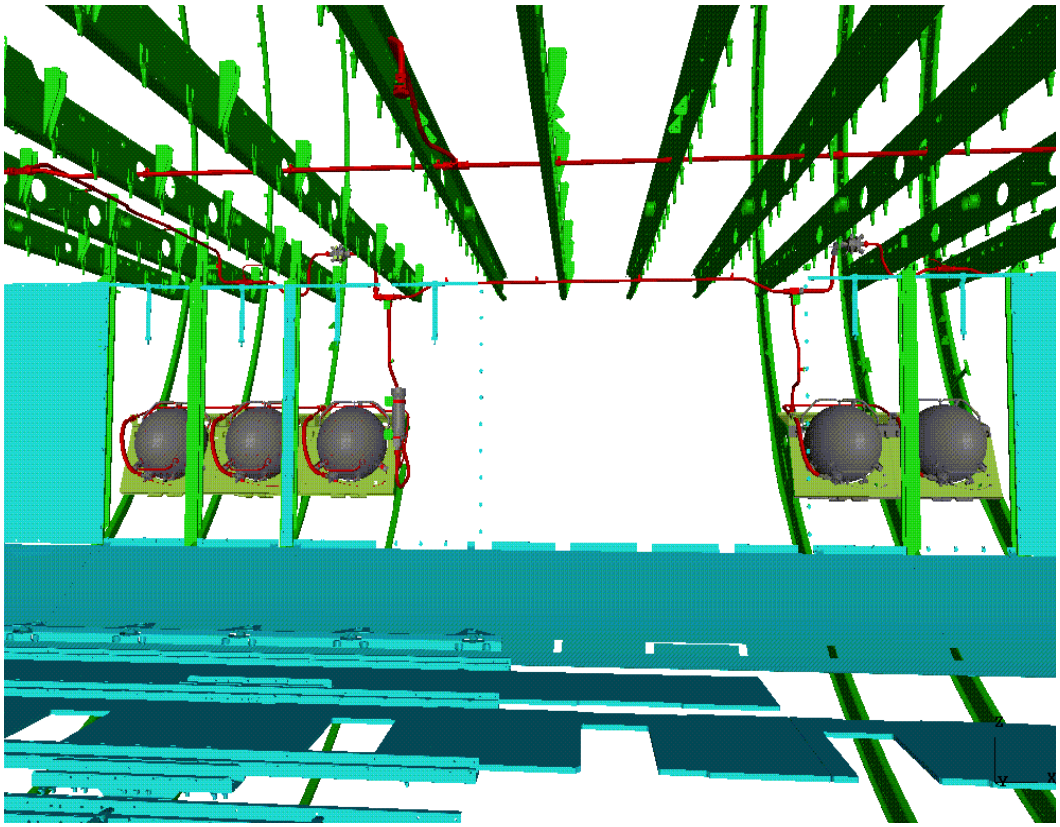

Figure 15. Isometric 777 Cargo Fire Extinguishing System Bottle Installation

Figure 16. 747-400 Lower Cargo Compartment

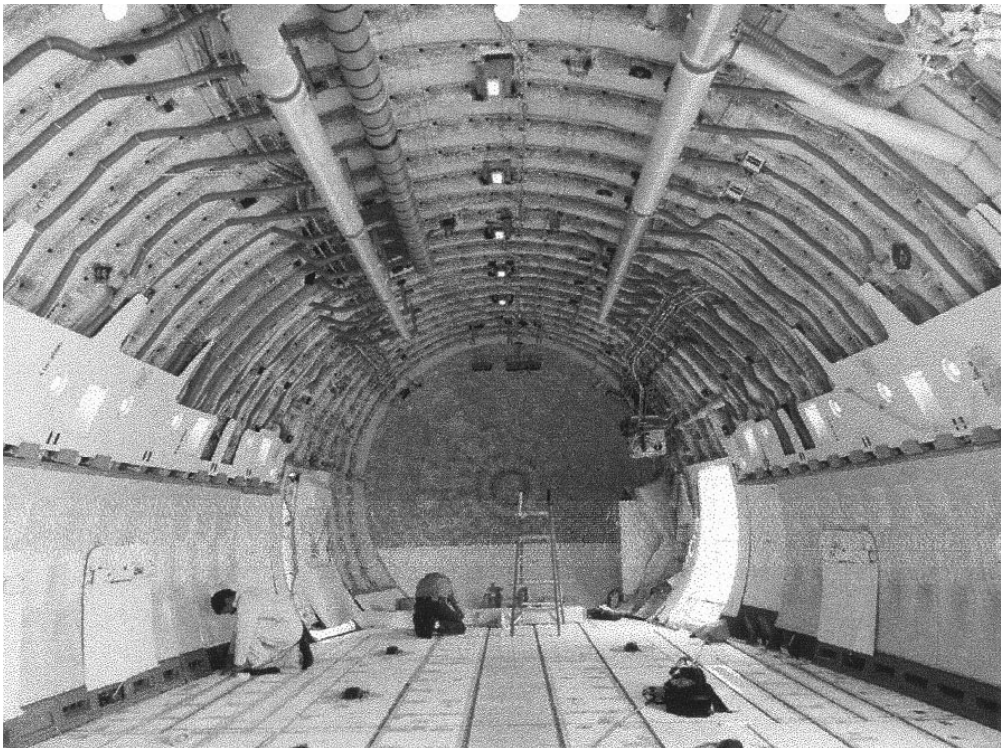

Figure 17. 747-400 Main Deck Cargo Compartment

In all models, once a fire is detected and the halon system discharged, minimum Halon concentrations are required at all times for the required duration for any cargo-loaded configuration. Table 2 summarizes the specific cargo fire extinguishing system performance parameters by airplane model.

Table 2. Cargo Fire Extinguishing Performance by Airplane Model

	737-800	**747-400**	**747-400 main deck**	**757-300**	**767-300**	**777-300**
Initial discharge system						
Quantity of Halon 1301, lb	33	110	294	33	80	137
Max concentration forward*	15%	6.8%	7% (main deck)	9%	7.4%	7%
Max concentration aft*	12%	6.2%	n/a	8%	7.6%	6.6%
Time to 5% concentration	$^1/_2$ min	2 min	$^2/_3$ min	$^1/_2$ min	1 min	2 min
Time to max concentration	$1^1/_2$ min	3 min	1 min	$1^1/_2$ min	$1^1/_2$ min	3 min
Metered discharge system						
Quantity of Halon 1301, lb	n/a	160	920	55	113	**240**
Sustained concentration forward		3.7%	3.2%	8%	3.2%	5.0%
Sustained concentration aft		3.6%	n/a	6%	3.8%	3.6%
Duration above 3%	>60 min	>195 min	>90 min	>195 min	>195 min	>195 min
Sustained compartment test leakage rate in fire mode	4 ft^3/m forward, 12 ft^3/m aft, (11 ft^3/m forward, 19 ft^3/m aft unpressurized)	82 ft^3/m forward, 84 ft^3/m aft	955 ft^3/m	11 ft^3/m forward, 14 ft^3/m aft	61 ft^3/m forward, 57 ft^3/m aft	78 ft^3/m forward, 99 ft^3/m aft
Cabin altitude in fire mode	8,000 ft	8,500 ft	8,000-8,500 ft	9,500 ft	7,500 ft	8,000 ft
Initial cargo ventilation rate For ventilated compartments	None	Up to 1,800 ft^3/m	Up to 1,800 ft^3/m	Up to 300 ft^3/m	Up to 500 ft^3/m	Up to 1,200 ft^3/m
Cargo fire extinguishing total system gross weight	70 lb	410 lb	1,680 lb	150 lb	310 lb	500 lb

*Empty compartment average concentration.

The knockdown system in all Boeing airplane cargo fire extinguishing systems consist of the Halon bottles discharged through a distribution tubing system to discharge nozzles in the respective cargo compartment ceiling. The system is sized as a function of compartment volume, temperature, and cabin altitude and typically takes 1 to 2 min to reach maximum concentrations. The cargo fires suppression performance requirements for each of the study models is shown in Table 2. Note that the 747-400 Class B main deck compartment discharges 294 lb of Halon in its knockdown system.

The metered system is either discharged at the same time as the knockdown or after a specified time delay and provides a steady-state Halon flow rate to maintain compartment Halon concentrations above a minimum level for a specified duration.. The metered flow rate is a function of compartment leakage. The higher the compartment leakage rate, the higher the Halon flow rate must be to compensate. Cargo compartments are designed to minimize compartment leakage when in fire mode to maximize Halon retention and to reduce smoke penetration effects. Class C compartment leakage rates vary from as little as 11 ft^3/m on the 757-300 to as much as 99 ft^3/m on the 777-300 airplane. The 747-400 Class B main deck compartment's leakage rate can be as high as 955 ft^3/m.

B.4 Cargo Compartment Physical Parameters and Fire Hardening

Lower lobe Class C cargo compartments are long, narrow, and low in height, fitting within the contours of the airplane's fuselage and airplane structure. Boeing airplane Class C cargo compartments range in size from less than 800 ft^3 on the 737-800 airplane to greater than 6,000 ft^3 on the 777-300 airplane. The Class B main deck cargo compartment on a 747-400 Combi has a volume of nearly 11,000 $ft^{3.}$ The sidewalls and ceiling of Class C compartments are fire-hardened. Critical systems within a Class B compartment are protected by a fire-hardened liner that passes the burn-through requirements of FAR 25, Appendix F, Part III. Table 3 summarizes the Task 1 study airplane cargo compartment physical dimensions.

Any new inert gas separation technology that is to be considered as a replacement agent for Halon 1301 will have to meet the existing performance standards set forth for halon as a MINIMUM. Any measure of performance less than that currently available from the use of halon is not a safety enhancement, rather the opposite.

C. PASSENGER OXYGEN

C.1 System Description

In the event of an emergency aircraft decompression, supplemental oxygen must be provided to the flight crew, passengers and flight attendants to protect them from the effects of hypoxia. The FAA and JAA regulations require that the passenger oxygen system must activate before the aircraft cabin’s altitude exceeds 15,000 ft (decreases in atmospheric pressure) and be capable of producing the required amount of oxygen in less than 10 sec. The passenger system is not designed to protect the passenger from smoke and toxic fumes, only hypoxia, the loss of consciousness due to the lack of oxygen. The passenger mask is designed to meet the requirements of TSO C64a.

Table 3. Cargo Compartment Physical Parameters by Airplane Model

	737-800	**747-400**	**757-300**	**767-300**	**777-300**
Cargo compartment free air space volume					
Forward	719 ft^3	5,000 ft^3	1,071 ft^3	3,096 ft^3	6,252 ft^3
Length	298 in	510 in	495 in	486 in	590 in
Width	125 in	184 in	80 in	140 in	164 in
Height	42 in	80 in	44 in	68 in	80 in
Percent of compartment volume occupied by cargo	Up to 50%	**Up to 67%**	Up to 75%		Up to 67%
Aft	961 ft^3	5,000 ft^3	1,295 ft^3	3,152 ft^3	5,667 ft^3
Length	221 in	680 in	558 in	572 in	817 in
Width	123 in	184 in	80 in	140 in	164 in
Height	45 in	80 in	54 in	68 in	80 in
Percent of compartment volume occupied by cargo	Up to 50%	Up to 67%	Up to 75%	Up to 67%	**Up to 67%**
Main deck (747-400 only)		10,912 ft^3			
Length		672 in			
Width		232 in			
Height		150 in			
Percent of compartment volume occupied by cargo		Up to 50%			
Cargo compartment free air space volume					
Forward	719 ft^3	5,000 ft^3	1,071 ft^3	3,096 ft^3	6,252 ft^3
Length	298 in	510 in	495 in	486 in	590 in
Width	125 in	184 in	80 in	140 in	164 in
Height	42 in	80 in	44 in	68 in	80 in
Percent of compartment volume occupied by cargo	Up to 50%	Up to 67%	Up to 75%		Up to 67%
Aft	961 ft^3	5,000 ft^3	1,295 ft^3	3,152 ft^3	5,667 ft^3
Length	221 in	680 in	558 in	572 in	817 in
Width	123 in	184 in	80 in	140 in	164 in
Height	45 in	80 in	54 in	68 in	80 in
Percent of compartment volume occupied by cargo	Up to 50%	Up to 67%	Up to 75%	Up to 67%	Up to 67%
Main deck (747-400 only)		10,912 ft^3			
Length		672 in			
Width		232 in			
Height		150 in			
Percent of compartment volume occupied by cargo		Up to 50%			

The supplemental oxygen system is required to provide passenger protection against hypoxia from the aircraft's maximum certified altitude to a cabin altitude of 10,000 ft. FAA/JAA Regulation 25.1441(d) limits commercial jet transport cabin altitude to less than 40,000 ft during a rapid decompression. For this reason, the system must survive altitudes up to and including the maximum certified altitude but its performance requirements are based on a maximum cabin altitude of 40,000 ft down to 10,000 ft. Typical descent profiles that would be flown by Boeing aircraft in the event of a decompression are illustrated in Figure 18.

The first curve on Figure 18 portrays an aircraft flying a typical 12-min profile that provides for the minimum aircraft descent profile. This descent profile will clear most terrain obstacles in North America, South America, Europe, and Asia. It should be noted that the aircraft is capable of descending at a faster rate and from maximum certified altitude to below 10,000 ft than is shown by the 12-min curve. This is a fixed profile that is used for consistency across all Boeing models and can be used for the vast majority of city pairs that airlines currently fly. The second curve illustrates a typical 22-min profile that is used to clear some mountainous terrain in South America and in Asia. It covers the majority of city pairs that airlines fly that cannot be covered by the 12-min descent profile.

The third profile can be customized to meet severe terrain clearance conditions, as might be found flying over the Himalayan Mountains. The "hold at altitude" time depends greatly on the city pairs being flown and the availability of acceptable diversion airports in the event of a decompression emergency. Some of the longer routes may have total flight times that require oxygen for 70 min. These route structures are specific to customer operational requirements and gaseous oxygen systems are designed accordingly.

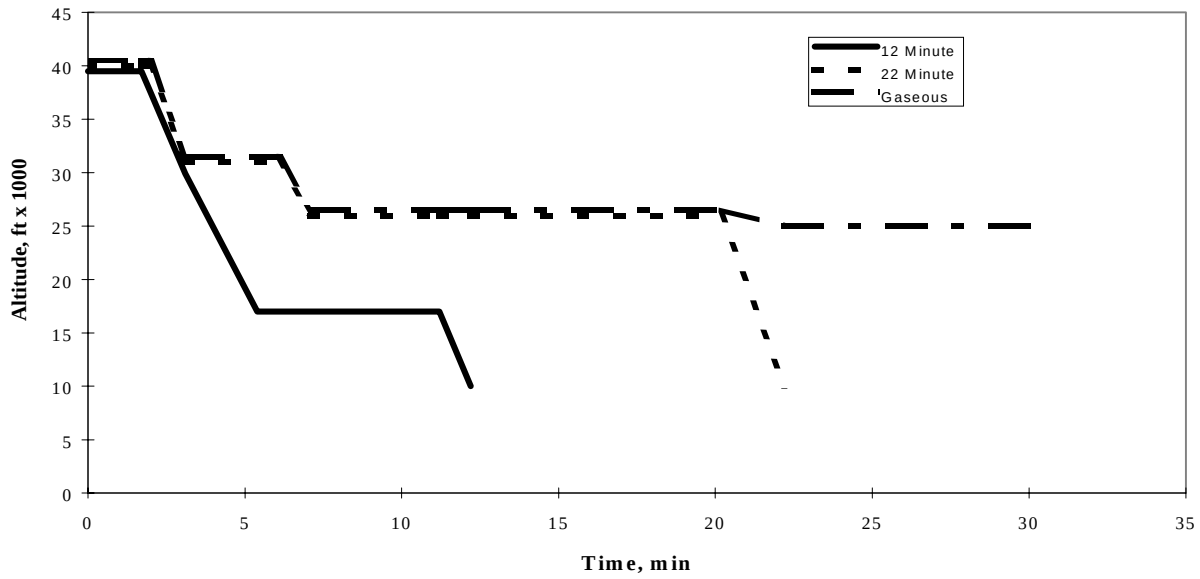

Figure 18. Aircraft Descent Profiles

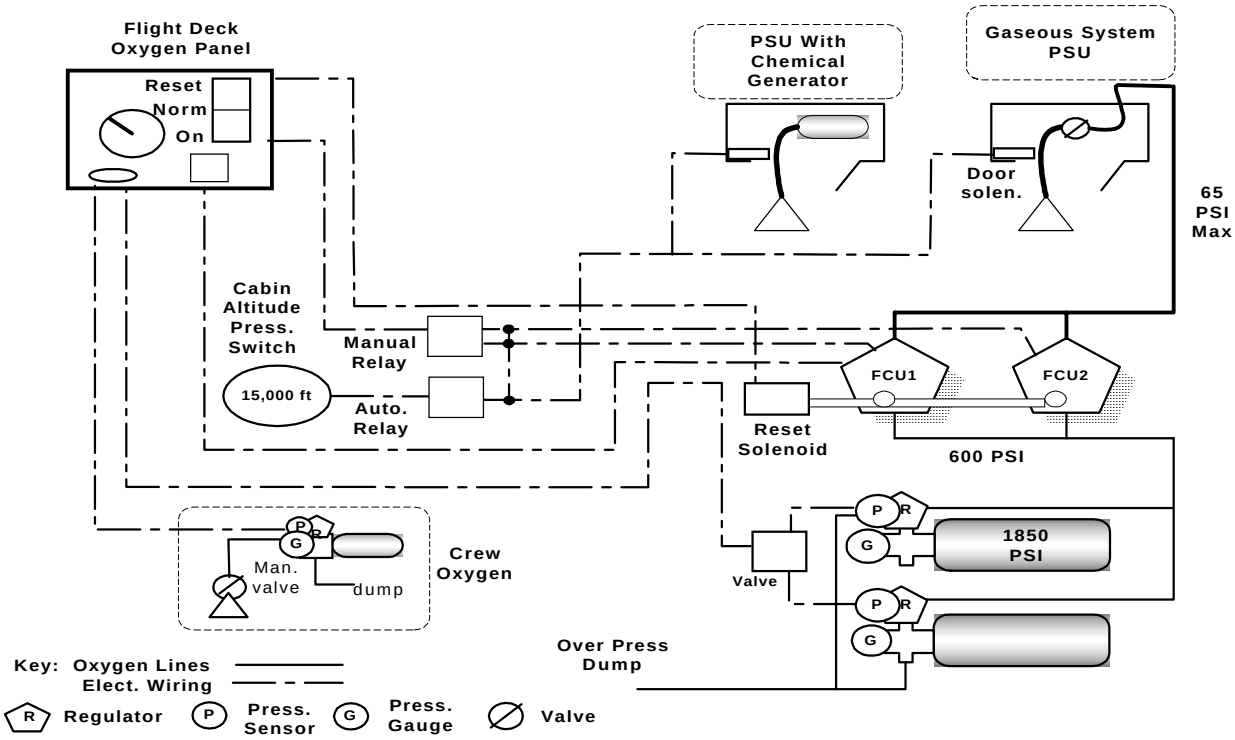

Figure 19. Gaseous Oxygen System

There are two types of passenger oxygen systems available for commercial jet transport. They are chemical generation systems and stored gaseous systems. Each will be described in detail later. Figure 19 shows the schematic for the two different types of oxygen systems. The 12- and 22-min profile curves shown in Figure 18 usually have passenger oxygen systems that are of the chemical generation type. The third descent profile always requires the use of a stored-gas type of passenger oxygen system to utilize its oxygen storage flexibility and storage requirements. It is this latter descent profile that places the most demand on oxygen systems because of the longer required flight time at higher altitudes with large numbers of passengers in order to clear mountains and terrain to make an available alternate airport.

C.2 Supplemental Oxygen Requirements

The FAA and JAA requirements for supplemental passenger oxygen systems are the same for both chemical and gaseous type systems. The amount of supplemental oxygen that is required for each person flying on a commercial jet transport aircraft is defined in FAR/JAR 25.1443(c). This requirement states the mean tracheal oxygen partial pressure in mm. Hg. required at different cabin altitudes. To make these values more useful for our analysis, they were converted to liters/minute (L/m) NTPD for cabin altitude starting at 10,000 ft and then in 1,000-ft increments to 40,000 ft. This conversion is a lengthy process and is covered in Society of Automotive Engineers (SAE) document AIR 825B, Section VI.

Table 4 lists the minimal supplemental oxygen requirements needed for an individual at each cabin altitude to meet FAR 25.1443(c). These consumption rates are consistent for any commercial jet transport aircraft. In any system design it is prudent to add a safety factor to the

minimum requirements to allow for component performance tolerances and possible mask leakage around the face. For our analysis, a 5% safety factor is added. Table 4 also lists the values for system-level performance for supplemental oxygen provided to each individual.

By using the emergency descent profiles listed in Table 4, it is possible to calculate the rate of consumption of oxygen at each altitude and the total quantity of oxygen required for each major model.

Table 4. Minimum Oxygen Required at Cabin Altitude—Per Person

Cabin altitude, ft x 1,000	**AIR 825B theoretical oxygen, L/m NTPD**	**FAR minimum oxygen, L/m NTPD**	**Minimum system flow, L/m NTPD**
10	0.008	0.018	0.018
11	0.107	0.114	0.119
12	0.203	0.204	0.214
13	0.296	0.292	0.306
14	0.386	0.376	0.395
15	0.473	0.458	0.481
16	0.553	0.538	0.565
17	0.639	0.615	0.646
18	0.717	0.689	0.724
18.5	0.756	0.730	0.767
18.5	0.744	0.723	0.759
19	0.820	0.794	0.834
20	0.967	0.934	0.980
21	1.110	1.068	1.121
22	1.248	1.204	1.264
23	1.381	1.344	1.411
24	1.510	1.481	1.555
25	1.634	1.612	1.693
26	1.754	1.738	1.825
27	1.869	1.860	1.953
28	1.981	1.992	2.092
29	2.089	2.122	2.228
30	2.192	2.247	2.359
31	2.292	2.368	2.486
32	2.389	2.499	2.624
33	2.481	2.630	2.762
34	2.571	2.754	2.892
35	2.657	2.891	3.036
36	2.740	3.025	3.176
37	2.819	3.164	3.322
38	2.895	3.307	3.472
39	2.967	3.453	3.626
40	3.035	3.603	3.783

C.3 747 Oxygen Consumption Calculation

As an example, the rate of oxygen consumption for the 747 can be calculated by multiplying the total number of individuals that require supplemental oxygen by the rate at which each individual needs oxygen, which is dependent on cabin altitude. The rate of supplemental oxygen required for each individual is defined by FAR 25.1443(c) and is discussed in the above sections The results are shown in Table 4 under "Minimum system flow," include a 5% added safety margin per passenger.

The total number of individuals requiring oxygen is dependent on three factors. First is the maximum number of passengers that can be accommodated by the 747 configuration. Second is the number of attendants that are required to support the maximum passenger count. Third, FAR 25.1447(c)(1) requires an additional 10% oxygen masks distributed evenly throughout the passenger cabin.

The maximum number of passengers that a 747-400 is certified to carry is limited to 600 by the FAA. The FAA requires at least 1 flight attendant for every 50 passengers for a total of 12 attendants. The total number of individuals (+10%) requiring supplemental oxygen is then calculated as follows:

Total number of individuals = (600 passengers + 12 attendants) $*$ 1.10

Total individuals = 673

The rate of oxygen consumption at each altitude can then be calculated as follows for the 747-400:

Rate of oxygen consumption = total individuals $*$ L/m at altitude

Rate of oxygen consumption = 673 $*$ value from Table 5

The results for these calculations are shown in Table 5 under "L/m NTPD" and shown graphically in Figure 20.

Total oxygen consumed is dependent on the aircraft descent profile as described in section C. By using data from Table 5 and then defining a descent profile similar to those shown in Figure 18, the total oxygen consumed can be calculated by integrating the area under the curve between 40,000-ft and 10,000-ft altitudes.

C.4 747 Oxygen System Weight

The weight calculations for the 747-400 include the weight of storage cylinders, support assemblies, brackets, pressure regulators, flow control units, couplings, tubing, hoses, and miscellaneous hardware used for installation. The weight numbers do not include the weight of the passenger service units because they are required to be installed independently of the system that delivers or produces the supplemental oxygen supply.

A passenger system consisting of four storage cylinders is required to provide the minimum oxygen supply for the maximum passenger occupancy and the equivalent of a 12-min emergency descent profile. The weight of this system would be 311 lb.

The average number of oxygen storage cylinders installed on the 747-400 is nine. A system of this size will weigh 562 lb. A system of nine 3hT compressed gas bottles would contain 9x3200 L/bottle= 28800 liters of oxygen.

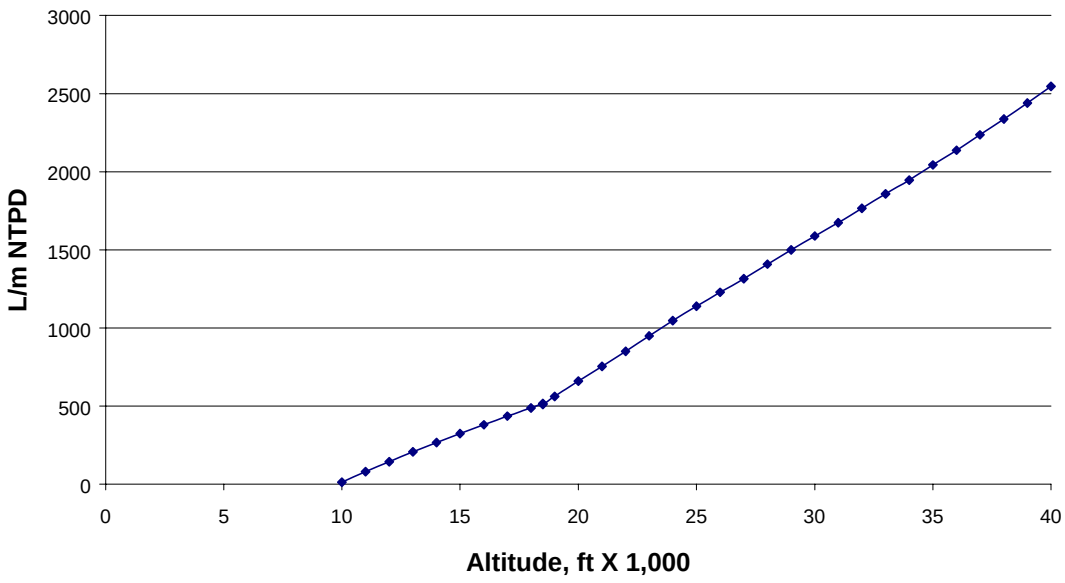

Figure 20. 747-400 Oxygen Consumption Rates

Table 5. 747-400 Oxygen Consumption Rate Calculations

Altitude, ft X 1,000	Rate, L/m	L/m NTPD	Altitude, ft X 1,000	Rate, L/m	L/m NTPD
10	0.018	12.1	25	1.693	1139.4
11	0.119	80.1	26	1.825	1228.2
12	0.214	144.0	27	1.953	1314.4
13	0.306	205.9	28	2.092	1407.9
14	0.395	265.8	29	2.228	1499.4
15	0.481	323.7	30	2.359	1587.6
16	0.565	380.2	31	2.486	1673.1
17	0.646	434.8	32	2.624	1766.0
18	0.724	487.3	33	2.762	1858.8
18.5	0.767	516.2	34	2.892	1946.3
18.5	0.759	510.8	35	3.036	2043.2
19	0.834	561.3	36	3.176	2137.4
20	0.98	659.5	37	3.322	2235.7
21	1.121	754.4	38	3.472	2336.7
22	1.264	850.7	39	3.626	2440.3
23	1.411	949.6	40	3.783	2546.0
24	1.555	1046.5			

C.5 OXYGEN QUALITY

The oxygen calculations for both crew and passenger systems use oxygen quality that meets MIL-PRF-27210G, Type I. The quality of aviator's breathing oxygen is at least 99.5% pure oxygen. This is the quality the FAA expects to be used when specifying the requirements in FAR 25.1439, 25.1443, 25.1445, 25.1447, and 25.1450. Any system that could not generate this level of quality would be subject to special conditions applied by the FAA. At a minimum, increases to the supplemental oxygen flow rates would be required to meet the equivalent levels of protection that is provided today. This could significantly impact the total quantity that must be carried or produced.

Additionally, the FAA may reduce the maximum allowed cabin altitude of 40,000 ft, which lowers the maximum cruise altitude of the aircraft. This would affect the overall performance of the aircraft. If the percentage of oxygen drops in the inspired gas mix to the user, then the maximum cabin altitude must also drop to provide the equivalent level of safety.

As seen in Figure 21, to maintain a 10,000-ft equivalent altitude breathing air (y-axis) at an altitude of 40,000 ft (x-axis), 100% oxygen must be used. To maintain a 10,000-ft equivalent altitude breathing air using an 80% oxygen air mix, the maximum cabin altitude would be approximately 37,000 ft.

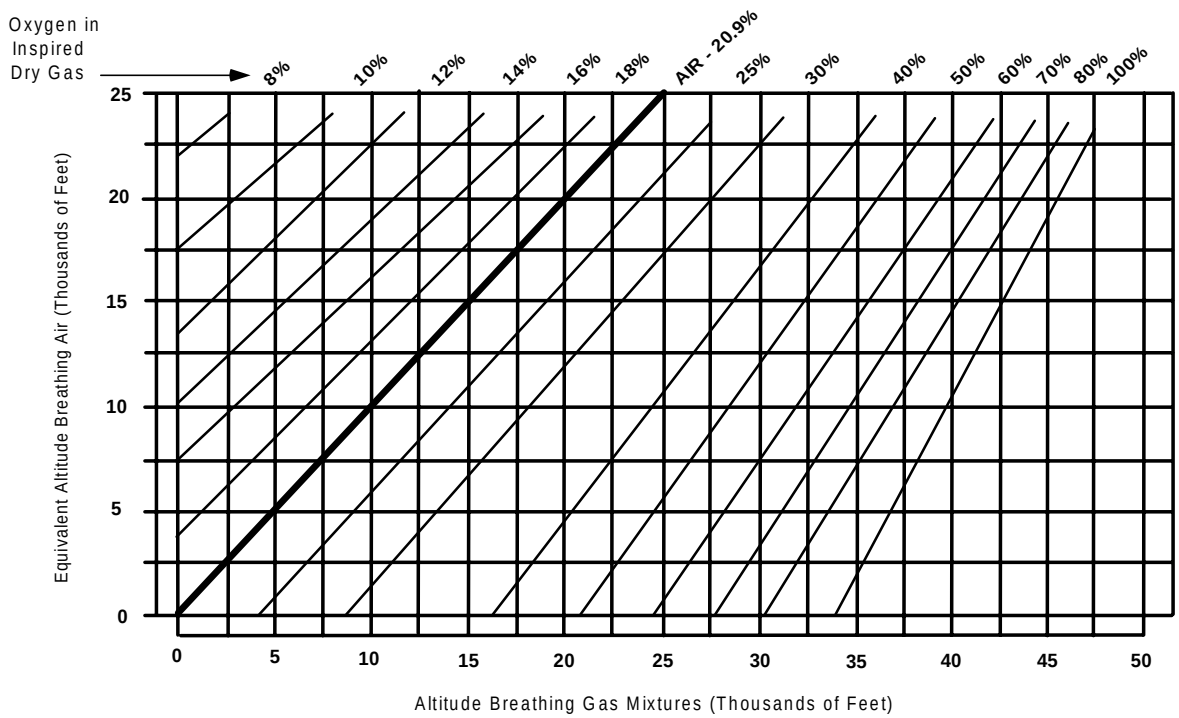

Figure 21. Equivalent Altitude

VI. AIRPLANE REQUIREMENTS

A. TASK 1 STUDY MODELS

The Task 1 study performed under the same NASA contract addressed the requirements Boeing must comply with for delivering commercial passenger jet aircraft. In Task 1 Aircraft Requirements reviewed the certification requirements for representative models of Boeing's current in-production aircraft. These models included: the single aisle 737-800 and 757-200, the twin aisle 767-300, 777-300 and 747-400. The 747-400 Combi was also included because of its unique requirements for accommodating both cargo and passengers on the main deck.

These requirements are of two generally categories: those that are required by the Federal Aviation Authorities in the form of FAR's and those that Boeing imposes upon itself in the form of design requirements and objectives, called DR&O's within the company. DR&O's are an exacting set of design standards that have been developed within Boeing over many decades of experience. The FAR's and DR&O's that pertain to the technologies of this report are discussed on the sections that follow.

B. NITROGEN CARGO FIRE SUPPRESSION ANALYSIS, REFERENCE 2

Use of nitrogen inerting gas to suppress a cargo fire is dependent on reducing the volumetric concentration of oxygen below a maximum level that will not sustain combustion. Such a system has not been demonstrated for airplane cargo compartment applications and it is not known what maximum oxygen (minimum nitrogen) level would be required to ensure an airplane cargo fire was adequately controlled.

Various data support different minimum levels of nitrogen to provide an inerting environment for different flammable materials, but no study was done specifically to evaluate airplane cargo compartment inerting requirements for fire suppression. The U.S. military has conducted fuel tank inerting tests and determined the minimum nitrogen inerting concentration limit was 9% oxygen (91% nitrogen), Reference 11. This limit was based on the threat of small arms fire up to 23-mm high energy incendiary (HEI) rounds. Studies of fuel tank inerting suggest that 86 to 90% nitrogen concentrations are required to prevent arcing ignition, References 12,13,14. One study indicated 84% nitrogen concentration is required to prevent hot-surface ignition, Reference 13. Another study provides data that suggests 82% nitrogen is sufficient to limit the flammability of methane and air mixtures, Reference 15. The FAA conducted tests to evaluate fuel tank inerting requirements for ground-based fires and found a range of fire protection from 9% oxygen concentrations up to 18% oxygen concentrations, Reference 16.

It should be noted that the above referenced studies were accomplished on Class B fire material, flammable liquid fuels, whereas cargo generally consists of Class A fire material, such as paper, wood products, and plastic. The FAA Technical Center's International Halon Replacement Working Group (IHRWG), now re-identified as the International Aircraft Systems Fire Protection Working Group (IASFPWG), has tentatively identified four fire scenarios for a Halon 1301 replacement testing:

a. Bulk fire load of Class A material.
b. Containerized fire load of Class A material.

c. Surface burning fire with Jet A fuel.
d. Exploding aerosol can fire.

There is some question as to whether these will be formalized as minimum performance standards equivalent in its effectiveness as Halon 1301 as there is no industry nor independent testing laboratory validation or acceptance of these as representative for controlling these fire scenarios.

The University of New Mexico Engineering Research Institute (NMERI) sponsors the Halon Options Technical Working Conference that has met annually for the past 11 years addressing the issues of replacement agents and testing. As of this writing there is not a consensus on these issues among this august body of physical chemists engaged in research on halon replacements. For the purposes of the Task 1 contract study, Reference 2, an analysis to assess the OBIGGS inerting capacity in airplane cargo compartments was completed at three different nitrogen inerting levels, 84%, 88%, and 91%, representative of the available study findings for controlling Class B fires. It is further recommended that full-scale lab testing be completed to validate inerting requirements in an actual airplane OBIGGS system for cargo fire inerting.

For aircraft applications there needs to be a distinction made between *inerting* and *extinction*. Inerting is creating and maintaining an atmosphere that will not support flame propagation even under the most severe conditions. Extinction is the total suppression of an already present flame or explosion front. A continuous inerting system in airplane cargo compartments is impractical because of compartment leakage that would require a large amount of gas to be carried. A cargo fire suppression system must provide extinction of the open flames and, in the case of nitrogen, an inerting environment from the point of extinguishing system discharge adequate to control or suppress any open flames. The dynamics of nitrogen inerting systems on an active Class A material cargo fire are unknown to the writers and would require validation through extensive tests before such a system could be approved for commercial airplane applications.

Typical airplane cargo fire suppression systems consist of an initial discharge or knockdown of suppressant, followed by either additional knockdowns or a metered system as necessary to maintain adequate fire suppression concentrations for the required duration. If and OBIGGS is likened to the current airplane fire suppression and required to meet the same performance standards, the system will require a knockdown discharge adequate to control a fire and a metering system that is effective in controlling a fire. The performance standards for any halon replacement agents or system, should be required, as a minimum, to meet the performance standards established for Halon 1301

For the referenced study purposes, the assumption was made that there is an initial discharge of suppressant at the same time the OBIGGS is activated to provide steady-state nitrogen concentrations in the cargo compartment. This initial or knockdown fire suppressant discharge will take one of two forms: it will either be nitrogen knockdown or it will be a non-nitrogen fire suppressant knockdown. This resulted in two models that are discussed in the reference 2.

Only the model dealing with a nitrogen “knockdown” is presented herein.

In the nitrogen knockdown model (Fig. 22) a reservoir of compressed or liquid nitrogen would be discharged at the same time that the OBIGGS would be activated to provide a steady-state nitrogen supply sufficient to control a fire. The nitrogen knockdown/ OBIGGS combination is modeled in Figure 23 and is graphically represented in Figure 24. Table 6 4.0-6 (95% pure nitrogen from OBIGGS) and 4.0-7 (98% pure nitrogen from OBIGGS) tabulate minimum OBIGGS flow rates for ensuring the indicated maximum O_2 concentration when integrated with a nitrogen knockdown system. The model makes the following assumptions:

a. The cargo compartment nitrogen level at the start is the same as that in the atmosphere, 79%.
b. Nitrogen concentrations to knock down (extinguish) the flame are the same level as that required to provide continued control over the fire.
c. Sufficient nitrogen is discharged in a knockdown system to reach minimum nitrogen inerting concentrations within 1 min.
d. OBIGGS provides either 95% pure nitrogen or 98% pure nitrogen.
e. OBIGGS flow rate provides sufficient nitrogen to account for a compartment leakage rate of the basic airplane with the Halon system plus the OBIGGS nitrogen flow rate.
f. Cargo compartment airflow leakage previously demonstrated with Halon systems are representative of airplanes with an OBIGGS.

It should be noted that the resultant pressure rise and its effect on cargo liners for a rapid discharge of nitrogen into a cargo compartment that would be necessitated with a nitrogen (or any other high-volume gas) knockdown system has not been evaluated. Such effects would be part of the design considerations for application on an airplane.

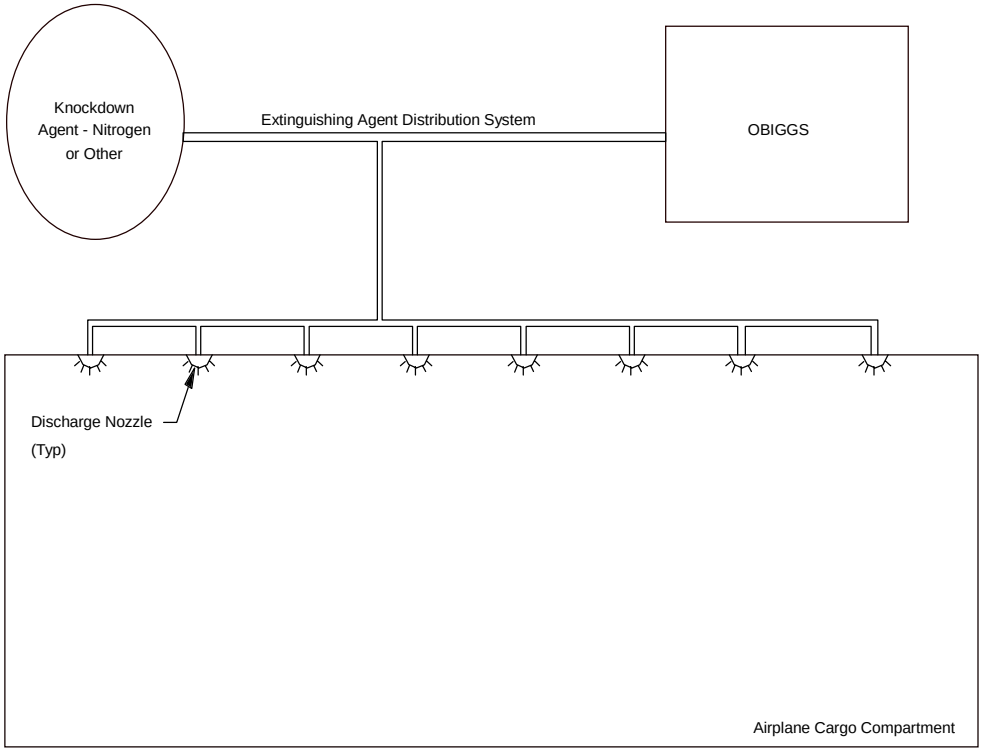

Figure 22. OBIGGS Cargo Fire Suppression System Schematic

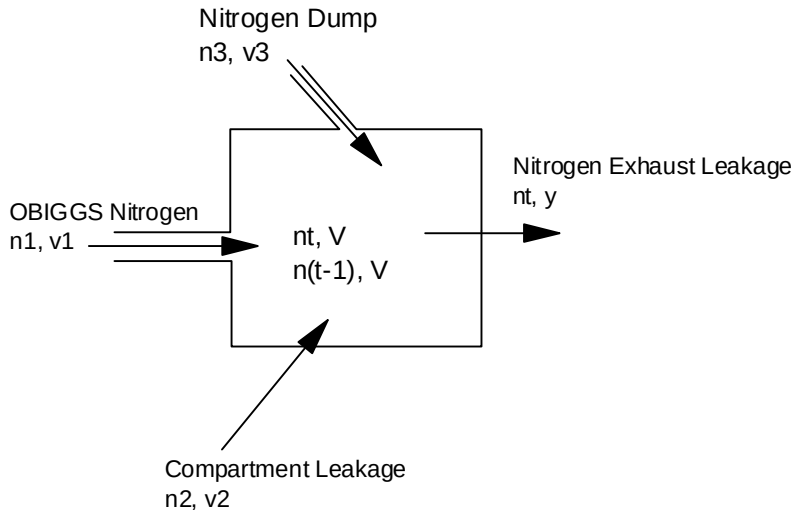

n1 = Nitrogen purity from OBIGGS (95% or 98% for this study)
v1 = OBIGGS flow rate (sft^3/m)
n2 = Nitrogen purity in air (79%)
v2 = Cargo compartment leakage rate from airplane Halon tests (ft^3/m)
n3 = Nitrogen purity in nitrogen knockdown (99% for this study)
v3 = Volumetric flow rate from nitrogen knockdown (ft^3/m)
nt = Nitrogen concentration in compartment volume at time t
n(t-1) = Nitrogen concentration in compartment volume at (t-1)
V = Compartment volume (ft^3)
y = Total compartment exhaust leakage (ft^3/m)
t-1 = One time increment
A nitrogen flow balance equation of the OBIGGS model yields:

$$n1v1(t-1) + n2v2(t-1) + n3v3(t-1) + n(t-1)V = ntV + nty(t-1)$$

A flow balance of the compartment air and nitrogen flows yields:

$$y = v1 + v2 + v3$$

Substituting:

$$nt = \frac{(t-1)(n1v1 + n2v2 + n3v3) + n(t-1)v}{V + (t-1)(v1 + v2 + v3)}$$

Figure 23. Nitrogen Knockdown With OBIGGS Control Volume Model

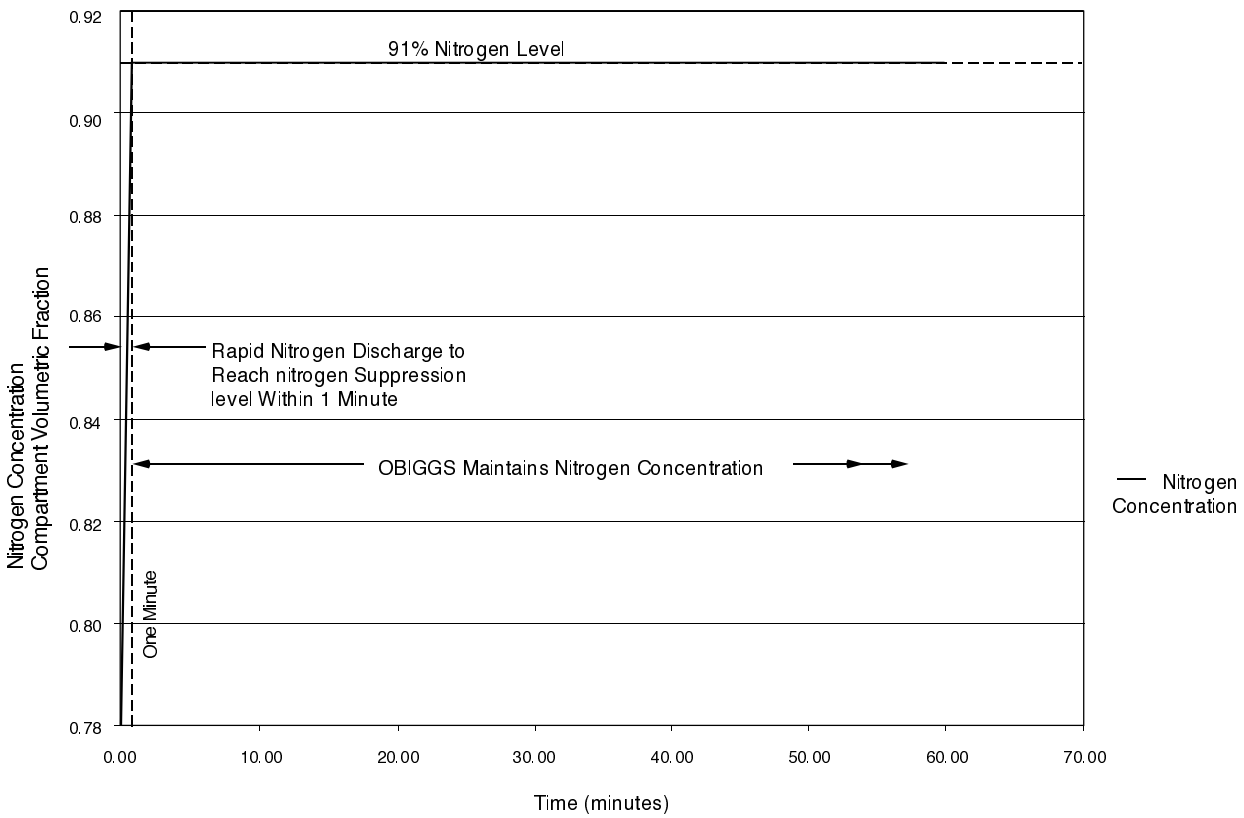

Figure 24. Typical Total Nitrogen Fire Suppression Model

The analysis is completed for both a volumetric-control and a mass-flow-control model. Typically, airplane cargo fire protection systems requirements have been defined by volumetric control. Figure 25 (95% nitrogen from OBIGGS) and (98% nitrogen from OBIGGS) provide an overall graphical assessment of a nitrogen knockdown/OBIGGS volumetric capacity requirements for installation on the fleet of Boeing airplanes in this study. Depending on OBIGGS efficiency, as little as 5 sft^3/m (0.4 lbm/m) OBIGGS flow rate delivering 98% pure nitrogen on a 737-800 airplane is required if 84% nitrogen is sufficient to control a fire, or as much as 297 sft^3/m (23.2 lbm/m) OBIGGS flow rate delivering 95% pure nitrogen is required if 91% nitrogen is required to control a fire.

The 747-400 Combi airplane main deck cargo compartment would require even greater OBIGGS nitrogen flow rates. These numbers are provided to give a range of reasonable nitrogen flow rate estimates for the various model airplanes.

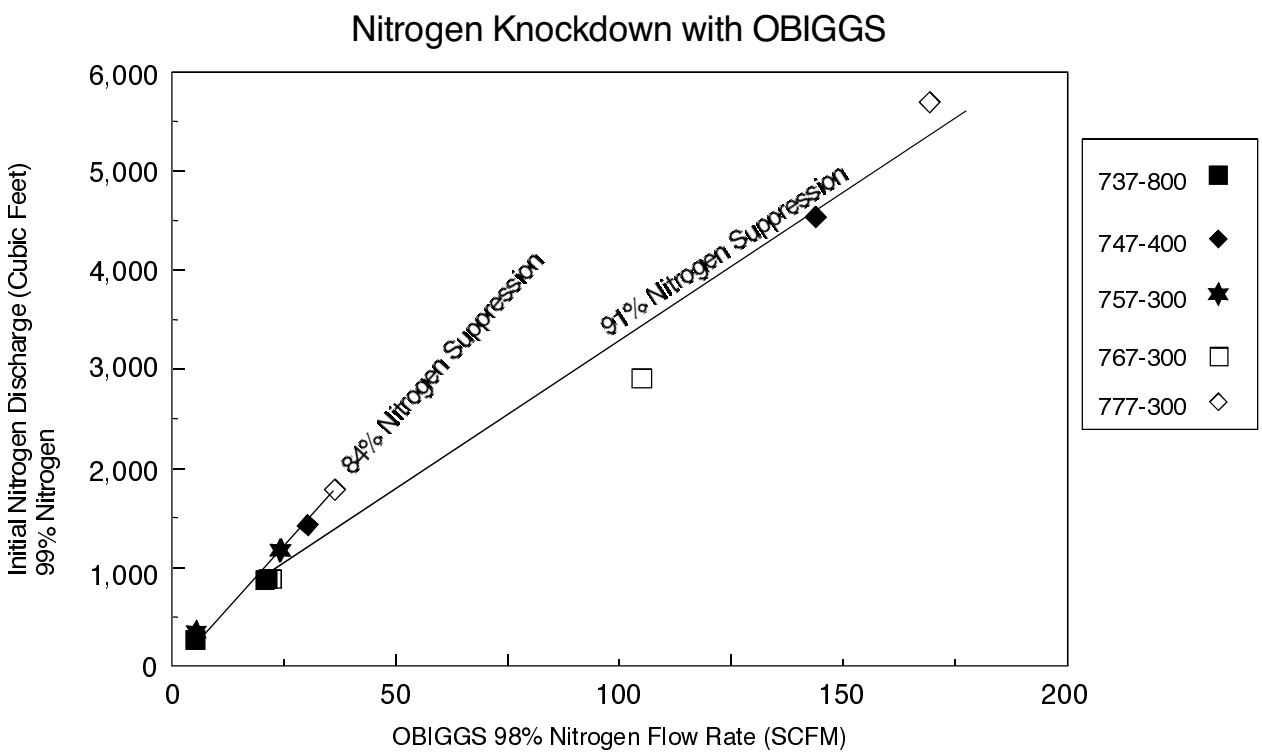

Figure 25. Overall Nitrogen Fire Suppression System Requirements

Tables 6 and 7 also show the quantity of nitrogen gas required in the knockdown to provide adequate suppressant concentration. When compared to Halon 1301, similar weights of nitrogen are required if 84% minimum nitrogen concentration after nitrogen knockdown is required to suppress a cargo fire. If 91% minimum nitrogen concentration is required to suppress a cargo fire, three to four times the weight of nitrogen is needed. The knockdown analysis may be somewhat conservative in that it assumes that the nitrogen concentration throughout the compartment quickly reaches equilibrium, where in the actual design, it may be viable to optimize the distribution system to displace the air in the compartment with nitrogen more effectively. However, the size and shape of the cargo compartment may limit the level of optimization and the conservative model is deemed appropriate for this study.

Table 6. Nitrogen Knockdown and 95% OBIGGS Analysis

Volumetric Flow Rate

	84% nitrogen inerting		88% nitrogen inerting		91% nitrogen discharge	
Airplane model	Nitrogen dump (STP ft^3)	OBIGGS metered rate (sft^3/m)	Nitrogen dump (STP ft^3)	OBIGGS metered rate (sft^3/m)	Nitrogen dump (STP ft^3)	OBIGGS metered rate (sft^3/m)
737-800	275	6	571	16	872	36
747-400	1427	39	2958	108	4504	252
747-400MD	2971	435	6037	1228	8820	2965
757-300	371	7	771	18	1177	42
767-300	882	28	1826	79	2777	183
777-300	1788	45	3713	128	5639	297

Mass Flow Rate

	84% nitrogen inerting		88% nitrogen inerting		91% nitrogen discharge	
Airplane model	Nitrogen dump (lbm)	OBIGGS metered rate (lbm/m)	Nitrogen dump (lbm)	OBIGGS metered rate (lbm/m)	Nitrogen dump (lbm)	OBIGGS metered rate (lbm/m)
737-800	22	.47	45	1.3	68	2.8
747-400	112	3.0	231	8.4	352	19.7
747-400MD	232	34	472	96	689	232
757-300	29	.55	60	1.4	92	3.3
767-300	69	2.2	143	6.2	217	14.3
777-300	140	3.5	290	10	441	23.2

Nitrogen knockdown with OBIGGS metered analysis; 95% nitrogen from OBIGGS; 99% nitrogen in knockdown

Table 7. Nitrogen Knockdown and 98% OBIGGS Analysis

Volumetric Flow Rate

	84% nitrogen inerting		88% nitrogen inerting		91% nitrogen discharge	
Airplane model	Nitrogen dump (STP ft^3)	OBIGGS metered rate (sft^3/m)	Nitrogen dump (STP ft^3)	OBIGGS metered rate (sft^3/m)	Nitrogen dump (STP ft^3)	OBIGGS metered rate (sft^3/m)
737-800	275	5	572	11	876	21
747-400	1428	30	2966	76	4540	144
747-400MD	2982	342	6123	860	9214	1638
757-300	371	5	772	13	1183	24
767-300	882	22	1832	55	2903	105
777-300	1786	36	3710	90	5682	170

Mass Flow Rate

	84% nitrogen inerting		88% nitrogen inerting		91% nitrogen discharge	
Airplane model	Nitrogen dump (lbm)	OBIGGS metered rate (lbm/m)	Nitrogen dump (lbm)	OBIGGS metered rate (lbm/m)	Nitrogen dump (lbm)	OBIGGS metered rate (lbm/m)
737-800	22	.4	45	.9	68	1.6
747-400	112	2.4	232	5.9	355	11.3
747-400MD	233	26.7	478	67.2	720	128
757-300	29	.4	60	1.0	92.4	1.9
767-300	69	1.7	143	4.3	227	8.2
777-300	140	2.8	290	7.0	444	13.3

Nitrogen knockdown with OBIGGS metered analysis; 98% nitrogen from OBIGGS; 99% nitrogen in knockdown

VII. TECHNOLOGY PERFORMANCE

The requirements to date for the subject air separation technologies have been driven by military requirements. In fuel tank inerting applications, the military applications are typically more demanding due to the need to inert tanks through successive tactical descents into areas that may cause the aircraft to come under hostile fire. Military OBOGS systems deployed to date have been sized only large enough to handle crew needs. An air separation system for oxygen with the capacity to handle a full complement of commercial jet passengers in a depressurization emergency has greater demands than anything currently required generically of military aircraft.

A. NITROGEN INERTING (FUEL TANKS)

The four major candidate systems for nitrogen inerting are HFM, PSA, cryogenic, and hybrid. By hybrid is meant a system employing a PSA device or HFM to get nitrogen separated from the air with the nitrogen then being cooled to cryogenic temperatures for storage in and subsequent deployment from storage dewars (This is admittedly a possible source of confusion as the term "hybrid" is also currently used to describe a cryogenic inerting scheme wherein the inerting is handled by the summation of previously stored LNEA along with the ongoing LNEA production). As defined in this report, the hybrid system would be a nitrogen generating equivalent to AHOS-M. In sizing HFM and PSA systems for direct inerting of fuel tanks, the maximum demand flow rate has to be determined first. The size of HFM and PSA devices is matched to the demand flow rate with the presumption that the aircraft systems have the pneumatic capacity to provide the necessary air inflow delivery, temperature, and pressure. The cryogenic and hybrid inerting approaches both involve stored LNEA and hence the sizing of these units involves the issues of gasification and delivery rates of LNEA, inerting demand, and time integrated inerting demand. In spite of this seeming complexity, the employment of LNEA storage allows selection of a smaller size nitrogen generating unit because LNEA collected during low demand periods can be used to enhance the output available from the nitrogen generating device during periods of peak demands. This concept is known as "load leveling" and it ameliorates the pneumatic demands on the airplane's systems.

The inerting requirements will be based on the fuel tank volume to be protected, assumed flight profiles, and periods when inerting will be required such as during taxi and take-off. This area has been one of intense study by the Year 2000 Aviation Rulemaking Advisory Committee (ARAC) in its considerations of both ground based inerting (GBI) of fuel tanks and OBIGGS of commercial aircraft. As such, an attempt is made to maintain a consistency between those efforts and the results reported here. At this time a comprehensive study is underway to determine the feasibility of ground based inerting as compared to onboard inerting of fuel tanks, the impact of inerting center wing tanks only as compared to inerting all tanks, and whether the target oxygen concentration for ullage fire safety should be the traditional 9 percent or some other figure. As to onboard inerting, systems studies are underway to evaluate the impact of inerting during all phases of flight as compared to the early phases only. Most of the ARAC participants are using an FAA-provided PC based model relating fuel properties and airplane flight conditions to ullage flammability. As an example of the type comparisons coming from the ARAC studies is Tables 8 and 9 which was provided by Creare, Inc., which shows the comparative performance and airplane requirements of three systems for a large plane having all tanks inerted all the time. As per ARAC definition, a large airplane would be similar to a B747, and the estimated system

weights amount to less than 1 pound per passenger for each of the three systems in the figure. All three systems are assumed to require the compression of cabin air to serve as the source of the nitrogen. Different results might have obtained had the systems been compared on the basis of each being supplied by engine compressor bleed air. Additionally, inerting only during taxi and take-off would affect the comparative penalties of each system to the airplane.

Table 8. Preliminary SAFTI Sizing
Large Transport
Required NEA1 Production Rate

	CWT Only	All Tanks	Comments
Full Time Inerting			
w/LNEA Storage	2.2	4.4	Initial Sweep 75 min No Turnaround Limit
w/o LNEA Storage	3.8	7.5	Initial Sweep 45 min No Turnaround Limit
Ground/Ascent Only			
w/LNEA Storage	1.4	2.4	130 min Initial Sweep 60 min Turnaround
w/o LNEA Storage	1.6	2.8	130 min Initial Sweep 60 min Turnaround

All values in lbm/min
Uses Ivor Thomas' Inerting Model

Table 9. ASM Technology Comparison

Large Plane, Short Mission, Full Time Inerting, All Tanks			
	Membrane^	PSA	SAFTI
Purity (% N_2)	94/90	93	99
Product Flow (lb/min)	11.7/25.2	13.3	4.4
Inlet Flow* (lb/min)	31.0/75.6	79.8	6.2
Cryo Power (kW)	0	0	29.3
Compressor Power* (kW)	49.6/121	127.7	9.9
Total Power (kW)	49.6/121	127.7	39.2

*Assumes 45 psia Inlet Air Pressure and 12 psia Cabin Air Pressure
^Two Different Inputs from Different Suppliers

B. NITROGEN INERTING (CARGO COMPARTMENT FIRE PROTECTION)

An entirely different civil aviation fire safety issue is associated with airplane cargo compartment fire protection. While fuel tank inerting would be a new and unprecedented regulation on the part of regulatory authorities, cargo compartment fire suppression requirements have been in place for some 40 years. These requirements have been modified and expanded in light of service experience. As an example, the accident involving a ValuJet cargo compartment oxygen-fed fire in 1996 had the end result that all passenger jet below-deck cargo compartments must be protected today by both a fire detection and halon gas fire suppression system. Previously, smaller cargo compartments in single aisle jets (so-called Class D compartments) were certificated with the assumption that smaller cargo compartments (when sealed) would cause any internal fire to consume all the enclosure oxygen and then self extinguish.

Considerations relating to depletion of stratospheric ozone have resulted in cessation of production of halon fire extinguishing agents. While aviation is presently exempted by the EPA from halon use restrictions in deployment and has a large halon bank to draw from for the foreseeable future, the aviation industry along with governmental organizations are actively seeking acceptable and effective replacements for Halon 1301. Additionally, it is rumored that new European civil aircraft models will be totally environmentally “green”. That is presently interpreted as a combined water and nitrogen suppression system for the cargo compartment. Thus, there may be efforts in the future to employ NEA to suppress fire or to keep a cargo compartment fire under control through inerting after the fire were knocked down initially by some other agent. The demands on an airplane for nitrogen as a fire-fighting agents would be quite different and more difficult than those associated with fuel tank inerting. This is due primarily due to the fact that cargo compartment fire suppression involves delivering high concentrations of NEA in large amounts for long periods of time in flight phases (cruise and descent) that challenge any air separation technique due to the low availability of excess engine bleed air during these low engine thrust flight phases. NEA applications for cargo compartment fire protection – even in “green” aircraft – represent a less critical safety application for nitrogen utilization than fuel tank inerting because there are a variety of approaches and agents for cargo compartment fire protection, but there are no other practical fuel tank inerting scheme other than one employing nitrogen. At this time system requirements for a NEA or LNEA cargo fire suppression role are difficult to estimate. It can be stated that the fire fighting performance of Halon 1301 is certain to be the baseline for Minimum Performance Standards for any replacement agents. Work has been completed on establishing the fire challenges and the fire test article requirements for accepting new gaseous agent systems, Reference 17, but there are problematical issues still to be solved for developing acceptance criteria for alternate approaches such as those using sprays and also pyrotechnic aerosols.

Halon 1301 in the concentration range of 3 to 5% by volume has proven effective over the years in suppressing (i.e., controlling but not necessarily extinguishing.) Class A fires in airplane cargo compartments. These Halon concentrations are such that they are able to prevent or extinguish flamelets associated with pyrolysis hydrocarbon species in the gas phase. Fuel tank ullages have been inerted through nitrogen addition when the oxygen concentration is diluted to 9% or below, Reference 13. By analogy with the flamelet suppression for cargo compartment fire control, this 9% number for maximum oxygen concentration should also be a satisfactory design number for use of onboard nitrogen systems to inert cargo compartments. Thus, after the initial knockdown

of a cargo fire, the nitrogen supply would have to be at least enough so that the nitrogen delivery (of 100 percent nitrogen) were 91% of the total cargo compartment leakage rate. The FAATC has conducted testing that established different levels of inerting for different levels of ignition. For example, a hot surface ignition can be prevented with an approximately 84% nitrogen level (16% oxygen), and 88% nitrogen for a 1.0 joule ignition spark, whereas in military applications, a minimum of 91% nitrogen is required to prevent ignition or explosion by 23 mm HEI cannon fire.

C. OBOGGS

As with nitrogen inerting, there are four general approaches to OBOGS systems that can be considered. They are ceramic membranes, PSA, cryogenic separation, and hybrid systems where hybrid systems refers to ceramic membranes (CM) or PSA systems followed by cryocooling for LOX accumulation and storage. The purpose of OBOGS in commercial airliners is to provide breathing oxygen for the passengers in the very rare event of a high altitude cabin depressurization event. The sudden and high demand nature of such an event – coupled with the real possibility that such an event could coincide with minimal aircraft engine support availability – makes a stored oxygen system of some sort to be an imperative. Because chemical oxygen generators and high pressure bottles have an extensive history of use for this application, the stored LOX options appear to offer the most benefit. As such, the four systems to be considered are CM/LOX, PSA/LOX, distillation and storage of LOX and TALON.

All of these systems represent advanced systems for which there is no exact precedent for airplane applications. The closest existing system is AHOS-M which is a deployable man portable oxygen systems developed by AFRL/HEPR for medical uses and special operations. The AHOS-M systems could actually be an OBOGS system if the air supply to it were to be taken from engine bleed air. All four considered units require cryocoolers to get the gas temperatures low enough so that oxygen (or oxygen and nitrogen) can be liquefied. The working fluid for the cryocoolers where oxygen is the only liquefied product can best be nitrogen, while helium or neon or some combination thereof is used in an application like TALON where nitrogen is also a liquefied product.

The oxygen requirements for an aircraft depressurization emergency can be developed from the Task 1 report, Reference 2. An example would be an emergency descent from an altitude of 40,000 feet to 10,000 feet. If the descent were a linear function of time and took a total of 12 minutes, then the Task 1 data can be integrated to show that each passenger needs a total of 20.8 standard liters be provided during the descent. In a hypothetical aircraft with a capacity for 182 passengers, the total oxygen delivery available to passengers alone would be the 182 plus 10 percent times the 20.8 standard liters or 4160 standard liters in all. This could be stored as about 5 liters of liquid oxygen. The difficulty of the distribution would be vaporizing and distributing the oxygen at the high rates needed at the start of the descent which would be momentarily 757 standard liters per minute.

These air separation systems with stored cryogens are attractive on a volume, weight, and safety basis, but they do present some new technical difficulties that need to be overcome in order to make these systems effective and competitive.

D. SPECIAL ISSUES

There are a number of ancillary issues to be considered in airplane applications of air separation devices:

1) Of importance is inlet air pre-treatment, and the pre-treatment needs vary among different air separation devices. For ceramic membranes, there is presently minimal service experience, but it can be surmised that the ceramic membranes are least susceptible to problems associated with inlet air contamination. Probably the membrane surfaces should be kept free from exposure to liquid in any form so as to prevent localized stresses that could lead to both structural and performance degradation. There is a differing opinion across industry regarding the susceptibility of Hollow Fiber Membranes to the effects of liquid water or heavy water vapor as to whether it will lessen the life of the modules. However, for proper operating efficiency the inlet air must be free of particulates and high hydrocarbon levels ($>C_6$) that could accumulate and cause deteriorated performance of the hollow fiber bundles. Because of the many polymeric components and sealants in the HFM ASM, excess acidity and certain gaseous impurities can lead to long term structural deterioration of these units. Cryocoolers have unique inlet air pretreatment requirements because of the extremely cold operating temperatures. Inlet molesieves need to remove water vapor and heavy hydrocarbons that would condense out and accumulate in the cryocoolers – possibly in the solid phase. Because large cryocoolers have operated successfully for decades in industrial settings and smaller ones on aircraft carriers, the aircraft environment is not expected to provide an unusually difficult design issues other than those associated with weight and maintainability. However, Boeing has engaged Creare, Inc. to conduct a series of IR&D tests to verify the effects of inlet air contaminants such as CO_2, hydrocarbons, and moisture in a laboratory environment, Figure 26.

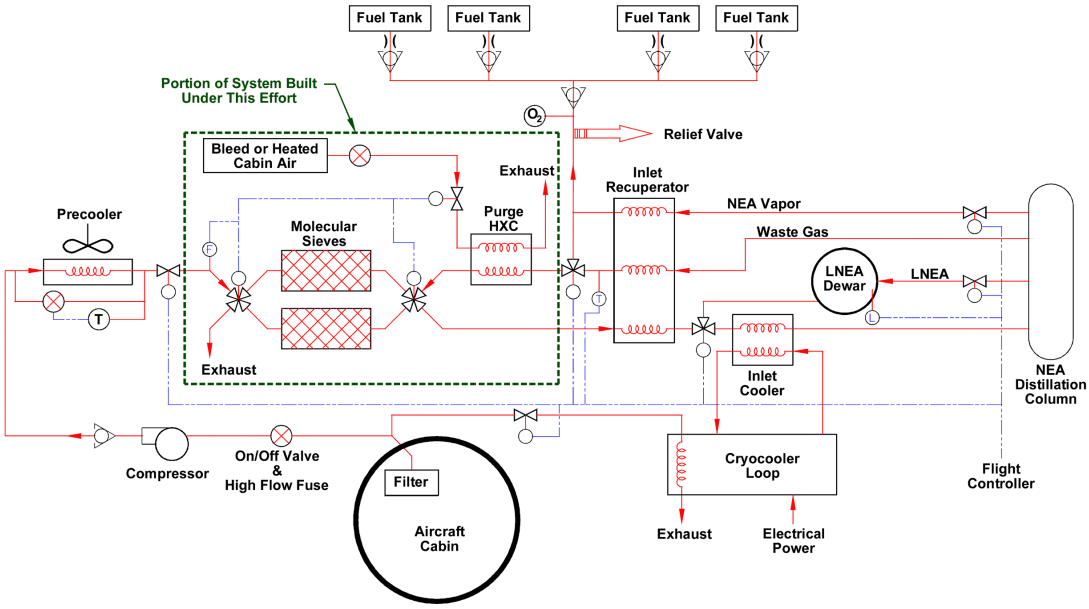

Figure 26. Precooling/Recuperation Subsystem

2) For LOX units aboard aircraft, additional attention needs to be placed on backflow contamination issues. Existing stored high pressure oxygen bottles and chemical oxygen generators are essentially "sealed" systems with minimum problems of contamination as presently deployed and serviced. Because of leakage stored oxygen gas systems must be frequently serviced, thus creating an unavoidable safety hazard. Servicing involves removal and replacement of compressed gas bottles when an aircraft's dispatch pressure is below 1850 psi. An onboard air separation system with LOX storage could potentially be contaminated from the back end if the storage dewars go dry. The engineering design of airborne LOX systems will need to consider all possibilities of contamination.

3) There continue to be unmet needs for lightweight, rugged, reliable gas sensors for both OBIGGS and OBOGS systems. This is especially true for oxygen measurement in fuel tank ullage spaces. The gas sensor issue is one piece of an overall health monitoring, maintenance, and inspection approach that would need to be established in association with the deployment of any air separation and storage system aboard commercial aircraft.

4) Should NEA be further considered as a replacement for halon as a cargo compartment fire protection agent, an improvement is also required in the smoke and fire sensor, detector and annunciation systems in the aircraft. Current "stand alone" and "draw through" smoke detector systems have a very high rate of false alarms, reported by the FAA Technical Center as 200:1, Reference 18. This has contributed to unnecessary precautionary release of halon ozone depleting agents, aborted flights, unscheduled maintenance and cleanup, angry passengers and nervous crews. New sensor/detection systems are key in the development of new approaches to fire protection as well as the careful evaluation of halon replacement agents. Flight deck crews need better information on the health of their aircraft during these types of in-flight emergencies, as indicted by the FAA contact study, Reference 19. Any new performance standards must be realistic, representative, and of a level of performance standard no less than that of halon.

E. COMPARATIVE EVALUATION—INERTING

At this time, the 2000 ARAC is providing comparisons of HFM, PSA, and cryogenic systems for nitrogen inerting and one such comparison was shown as Table 9. It is difficult to do fair comparisons of these systems because their operating and performance characteristics vary so much. Inlet air pressure, temperature and operating pressure are the primary parameters that have an effect on these characteristics. Other parameters such as the availability of electrical power, cooling, weight and real estate required for installation are other attributes that have to be taken into consideration.

The HFM systems provide their best performance at inlet air pressures at 100 psig and higher. However this is an operating pressure much higher than bleed air pressures more commonly available during aircraft cruise (typically 30 to 40 psig). Generally, fiber membrane performance is favored as temperatures are raised above ambient, Reference 20, but the 320 to 380 F bleed air temperature corresponding to the cruise condition is probably too hot for a typical production membrane ASM and degradation of the fibers will occur. Nevertheless, for bleed air pressures at 30 psig and at temperatures of 130 F, the ratio of NEA5 (i.e., 5 percent oxygen content) to

membrane inlet air flow will be between 25 and 30 percent. Under these conditions an ASM will produce about 2 lbm/min of NEA5 per 100 lbm of system installed weight.

As ASM inlet pressure is raised above 30 psig, the ratio of NEA5 product to inlet air mass flows will rise and so will the productivity of NEA5 per ASM unit weight. Increasing the inlet air pressure from 30 psig to 45 psig would allow about a 20 percent improvement in the ratio of NEA5 to inlet air mass flow and would allow a 100 percent improvement in the NEA5 production per installed ASM unit weight.

PSA units provide their best performance at lower pressures and temperatures than HFM. Nevertheless, the production of NEA5 can also be expected to be in the range of one to two lbm/min per 100 lbm of installed PSA hardware. The ratio of NEA5 to inlet air supply is expected to be between 10 and 20 percent. With the inlet air pressure requirements working in favor of PSA compared to HFM, the ratio product gas to inlet air flow is not as favorable. However, the flexibility of the PSA in control of product gas purity can be an advantage in terms of optimizing the product gas purity to the inerting gas requirements at any given time. Additionally, PSA systems can be configured to produce high purity oxygen suitable for aviator breathing and medical use. These additional attributes and capabilities have been discussed at length in other sections of this report.

Cryogenic inerting systems have features along with resultant advantages and disadvantages that provide further differentiation for those of HFM and PSA. With cryogenic systems such as TALON and SAFTI, the product gas flow to inlet air flow ratio is 70 percent, and this is for nitrogen that is more than 99 percent pure. It has been speculated upon by knowledgeable technologists , with resulting discussions, that a higher purity product gas provides for added flexibility in that NEA1 can be diluted with air to magnify volumetric flow rates when the conditions are most advantageous.

However, the addition of one part air to 5 parts NEA1 would dilute to NEA5. The overall air needs to make NEA1 cryogenically are such that the effective ratio of NEA1 to air supply is about 25 percent due to the additional air needed for the various heat exchangers in a cryogenic system. The additional heat transfer air does not have the same pretreatment needs associated with the air that will actually undergo the liquefaction process. The primary airplane system impact with cryogenic inerting is the electrical power requirements of the cryocooler compressor. This is estimated as 29 kW for full time inerting of all fuel tanks of a large aircraft all the time. The weight of such a system is estimated as 350 pounds, and this is stated as comparable to the weight of HFM and PSA systems for the equivalent large aircraft inerting requirement. A system that would only inert the CWT on a 777 size aircraft would require approximately 8kW and weigh somewhat less.

The inerting system that in the end could be used aboard a given commercial jet aircraft would probably not be selected on the basis of a hypothetical comparison of performance characteristics. The system selection will be based on two issues: NEA requirements and the airplane operation and integration capabilities. The NEA requirements could range from only inerting the CWT during TAXI and take-off to the inerting of all fuel tanks all the time plus cargo compartment fire protection reserves. Whatever the inerting requirement, the selected

system would have to be able to meet it. Airplane integration means the ability to spatially fit on an airplane, to function within the constraints of available pneumatic and electrical resources, and to be able to meet all appropriate certification requirements. The system must be cost effective to both install and maintain. Critical issues such and the Minimum Equipment List (MEL) and dispatch requirements will mandate systems of high reliability and not require unscheduled maintenance.

F. COMPARATIVE EVALUATION—OXYGEN

While the requirements for inerting depend on the levels of desired fire protection that are not yet established, the oxygen requirements for cabin depressurization events are known and documented as described in Section VI. Techniques for oxygen separation from air include PSA, SEOS (or COGS), and cryogenic separation. For airplane applications, PSA is the most well-established approach because so many military aircraft use small PSA units for providing oxygen to the crew. Even though depressurization events requiring oxygen are rare in civil aviation, these events are characterized by sudden demand for high rates of oxygen supply. In this study the assumption is being made that in the future this type oxygen demand will be met by liquid oxygen stored for the purpose in dewars. Thus, after air separation via PSA or ceramic membrane, the oxygen product must be liquefied for storage. The USAF AHOS-M prototype consists of a PSA unit and a liquefaction unit that provide a 99 percent pure liquid oxygen product; it is representative of the type hybrid system of interest for possible use in civil aviation.

PSA units that produce 93 percent pure gaseous oxygen (i.e., the argon constituent of air has not been separated from the oxygen) generally weigh one pound mass for each liter per minute of oxygen production capability. This can be stated as 1 lbm/lpm and referred to as a weight factor of unity. Each column of AHOS-M has a zeolite bed to remove nitrogen followed by a carbon bed to remove the argon. These beds and their controls weigh 226 lbm and the production capability is 30 lpm of 99 percent pure gaseous oxygen. The weight factor then is around 7. The oxygen liquefier for AHOS-M weighs 492 lbm for a total system weight of 718 lbm. Using this number results in a weight factor of 24. The power requirement for the liquefier's cryocooler is 5 kW.

The weight of each cryocooler on Creare's TALON system is 380 lbm and the power requirement of each is 19.7 kW. It can be estimated that a derivative cryogenic oxygen generator would weigh in the vicinity of 900 lbm and provide gas equivalent of 190 lpm of 99 percent pure oxygen but in liquid form. Thus the weight factor would be 4.7.

Ceramic membranes presently have a weight factor of about 7. They require about 100 watts to produce each liter per minute unit of 100 percent pure gaseous oxygen. This is about the same energy requirement for liquefaction of the oxygen component of air to get 99 percent pure liquid oxygen with an air distillation unit.

The relative advantages of the air separation approaches are controlled by the specifications on the end product oxygen. If 93 percent pure gaseous oxygen at ambient type pressures is the desired product, then the PSA units with weight factors of unity are the most viable devices. If gaseous 99 percent pure oxygen is desired, then the weight factors for PSA and SEOS/COGS are equivalent and the issue is whether low pressure product (favors PSA) or high pressure product

(favors SEOS/COGS) is desired. The energy requirement associated with SEOS/COGS is considerable and it could be most economical in a given installation to compress the PSA product gas to the required pressure rather than employ a ceramic membrane. If absolute biological purity of the product oxygen were deemed essential, then the ceramic membrane would be the obvious approach to select.

When 99% pure liquid oxygen is the required end product, then cryogenic distillation becomes the most viable choice. The weight factor for a cryogenic oxygen separation system is less than that for gaseous 99% product from either PSA or SEOS/COGS. The electrical power requirement for a TALON derivative liquid oxygen separator is about the same as for a SEOS/COGS gaseous product system and also comparable to AHOS-M energy requirements on a mass output basis.

In terms of waste gas streams, some general numbers can be stated. PSA producing 93% purity gaseous oxygen will generally need 20 to 25 times more inlet air than the oxygen gas produced. AHOS-M required 40 times the 99% pure oxygen product flow for air inlet flow. Because ceramic membranes are relatively insensitive to variations in oxygen content of their supply air, it can be estimated that their supply air needs would be about 10 times higher than their oxygen output in standard liters per minute. Cryogenic air separation units would probably need an air supply mass flow about 15 to 20 times higher than the oxygen product flow on a mass basis.

In the foregoing discussion, the provisional nature of the estimates must be recognized. AHOS-M has only been developed to proof of concept prototype with no efforts at optimization for weight or efficiency. The ceramic membranes represent a highly proprietary and competitive area of technology where all performance parameters have to be viewed with healthy suspicion. The small scale cryogenic air separator has yet to be demonstrated even as a prototype proof of concept system. Additionally, ongoing technical developments result in continued improvements in both PSA and ceramic membrane technologies.

VIII. PACKAGING/INSTALLATION REQUIREMENTS

In assessing the various packaging and installation requirements that must be taken into consideration when selecting a gas separation technology system, the certification base requirements will establish a minimum performance standard that must complied with. Federally mandated regulations are generally performance based as oppose to system based, allowing the aircraft designers the latitude of designing the best and most cost effective system into the aircraft.

While weight, volume and space are always a consideration for both the designer and the operator, what prevails are those system requirements that meet the performance standards of the ruling. It is occasionally heard around the design areas, “if you want to put something on the airplane it should not weigh anything, occupy any space or volume or cost anything and require no maintenance.”

Without a definitive set of standards only best “guestimates” or engineering approximations can be ascertained and will be based on presumptive knowledge of what the actual requirements will

be. In the case of fuel tank inerting system estimates of the parameters have been made based on prudent engineering judgment, anticipated rulings, common airplane sense and the laws of physics that govern flammability and properties of materials and gases.

For instance, in order to define the design requirements for an inerting system one needs to define what is to be inerted, i.e., all fuel tanks or just the center wing tank. One also needs to define to what level a tank or tanks need to be inerted, i.e., to what maximum level of oxygen concentration is acceptable. Thirdly, and maybe most importantly is when does the tank have to be inerted? If it is before an airplane leaves the boarding gate what will be the source of compressed air for the separation process? If it is to be provided by the airplane while it is at the gate, there is only APU air as the engines will in all probably not be operating at this location. This impacts the requirements of the APU or means a compromise in the when and what level of inerting. Maybe the requirement will be to be inert before takeoff. If that were the case, then it back through the loop of questions again. And again to determine if inerting is needed or required in climb, cruise, approach and landing. When, where and how much are really significant issues the have sever impacts on system design and hence, the weight, volume, area, power and bleed air required, and a multitude of other considerations.

For the purposes of making engineering approximations and estimated, the ARAC-I committee defined requirement for three sizes of aircraft: Large Transport, Medium Transport, and Small Transport. From a Boeing product line point of view these would be represented by a) a 747-400, b) 767-300 and c) a 737-800 respectively. Litton LS has prepared a fairly comprehensive analysis of the inerting requirements for these sizes of airplanes, included herein: Figure 27 for Large Transports, Figure 28 for Medium Transports and Figure 29 for a Business Jet.

Large Transport OBIGGS estimates: 20 minutes initial inert time (9% O2)

Index Number	Ascent / Descent Rates	Ullage Protected	Fuel Tank Capacity Gal.	Initial Time to inert to 9% O2. Minutes	OBIGGS Weight Lb.	Product flow, NEA7 @ 30 psig Lb. / min.	Air Usage NEA5 @ 30 psig Lb. / min.	Air usage (conservation mode: 50%) Lb. / min.	OBIGGS Cost $US
LT1	1/2 of maximum	CWT	17,164	20	680	13.6	65	33	$96,000
LT2	1/2 of maximum	all tanks	53,644	20	2125	42.4	205	102	$170,000
LT3	Maximum	CWT	17,164	20	**Same as "CWT," above.**				
LT4	Maximum	all tanks	53,644	20	**Same as "all tanks," above.**				

Large Transport OBIGGS estimates: Basic flight safety.

Index Number	Ascent / Descent Rates	Ullage Protected	Fuel Tank Capacity Gal.	Initial Time to inert to 9% O2. Minutes	OBIGGS Weight Lb.	Product flow, NEA7 @ 30 psig Lb. / min.	Air Usage NEA5 @ 30 psig Lb. / min.	Air usage (conservation mode: 50%) Lb. / min.	OBIGGS Cost $US
LT5	1/2 of maximum	CWT	17,164	84	170	4.2	20.5	10.2	$70,000
LT6	1/2 of maximum	all tanks	53,644	84	521	9.4	45.3	22.7	$88,000
LT7	Maximum	CWT	17,164	43	325	7.8	37.6	18.8	$78,000
LT8	Maximum	all tanks	53,644	43	1000	18.3	88.5	44.2	$113,000

Figure 27. Large Transport

Medium Transport OBIGGS estimates: **20 mins initial inert time (9% O2)**

Index Number	Ascent / Descent Rates	Ullage Protected	Fuel Tank Capacity Gal.	Initial Time to inert to 9% O2. Minutes	OBIGGS Weight Lb.	Product flow, NEA7 @ 30 psig Lb. / min.	Air Usage NEA5 @ 30 psig Lb. / min.	Air usage (conservation mode: 50%) Lb. / min.	OBIGGS Cost $US
MT1	1/2 of maximum	CWT	4,408	20	183	3.2	15.6	7.8	$42,000
MT2	1/2 of maximum	all tanks	7,060	20	292	5.2	24.9	12.4	$48,000
MT3	Maximum	CWT	4,408	20	**Same as "CWT," above.**				
MT4	Maximum	all tanks	7,060	20	**Same as "all tanks," above.**				

Medium Transport OBIGGS estimates: **Basic flight safety.**

Index Number	Ascent / Descent Rates	Ullage Protected	Fuel Tank Capacity Gal.	Initial Time to inert to 9% O2. Minutes	OBIGGS Weight Lb.	Product flow, NEA7 @ 30 psig Lb. / min.	Air Usage NEA5 @ 30 psig Lb. / min.	Air usage (conservation mode: 50%) Lb. / min.	OBIGGS Cost $US
MT5	1/2 of maximum	CWT	4,408	75	56	0.9	4.1	2.1	$35,000
MT6	1/2 of maximum	all tanks	7,060	75	81	1.4	6.6	3.3	$37,000
MT7	Maximum	CWT	4,408	41	104	1.8	8.5	4.3	$38,000
MT8	Maximum	all tanks	7,060	41	143	2.5	12.2	6.1	$40,000

Figure 28. Medium Transport

Business Jet OBIGGS estimates: **20 mins initial inert time (9% O2)**

Index Number	Ascent / Descent Rates	Ullage Protected	Fuel Tank Capacity Gal.	Initial Time to inert to 9% O2. Minutes	OBIGGS Weight Lb.	Product flow, NEA7 @ 30 psig Lb. / min.	Air Usage NEA5 @ 30 psig Lb. / min.	Air usage (conservation mode: 50%) Lb. / min.	OBIGGS Cost $US
BJ1	1/2 of maximum	CWT	217	20	21	0.17	0.82	0.41	$13,000
BJ2	1/2 of maximum	all tanks	763	20	42	0.60	2.91	1.45	$18,000
BJ3	Maximum	CWT	217	20	**Same as "CWT," above.**				
BJ4	Maximum	all tanks	763	20	**Same as "all tanks," above.**				

Business Jet OBIGGS estimates: **Basic flight safety.**

Index Number	Ascent / Descent Rates	Ullage Protected	Fuel Tank Capacity Gal.	Initial Time to inert to 9% O2. Minutes	OBIGGS Weight Lb.	Product flow, NEA7 @ 30 psig Lb. / min.	Air Usage NEA5 @ 30 psig Lb. / min.	Air usage (conservation mode: 50%) Lb. / min.	OBIGGS Cost $US
BJ5	1/2 of maximum	CWT	217	56	10	0.06	0.29	0.14	$12,000
BJ6	1/2 of maximum	all tanks	763	56	25	0.21	1.00	0.50	$13,000
BJ7	Maximum	CWT	217	32	12	0.10	0.48	0.24	$12,000
BJ8	Maximum	all tanks	763	32	27	0.35	1.68	0.84	$15,000

Figure 29. Business Jet

For these analyses Litton considered the ascent and descent rates, inerting all the tanks and only the CWT. In all cases the level of inerting (oxygen concentration) was same, 9% maximum O_2 concentration. The time to inert was assumed to be 20 minutes in one case, which drove the size of the system required to be larger to meet the maximum time constraint. In the second case the time to inert was more determined by a minimum sized system to meet the 9% concentration levels. As noted, the weights of the systems differed considerably. For instance, for the Large Transport aircraft to be able to inert all the fuel tanks (53,644 gal) in 20 minutes to 9% O_2 concentration the OBIGGS system would weigh an estimated 2125 lbs. and would require 205 lb/min of 30 psig bleed air.

In contrast, if the inerting time is extended to 84 minutes for the same tanks, the systems weight decreases to 521 lb., nearly ¼ as much. The bleed air requirement decreases to 45.3 lb/min at 30 psig. There is also considerable difference in unit costs, $170,000 vrs. $88,000 in 1997 dollars.

The same analogies can be repeated for each of the other conditions and models. But the fact remains, performance standards and requirements will have a significant impact on the overall system design, procurement, installation and operation costs to the manufacturer and operating line, all of which are passed along to the flying public in the price of tickets.

The TALON and SAFTI systems by Creare, Inc. are by far the most complex of all of the gas separation technologies investigated during the course of this study, yet these systems are also the most capable of meeting a wide variety of operating conditions, system demands, gas purity, startup and storage, for both military and commercial applications.

The heart of the Creare systems is their thermal recovery and distillation columns, and small high-speed turbomachinery cryocooler. A functional description is illustrated in Figure 30. The SAFTI system is a functional sub-set of the TALON system in that, as proposed, it is not configured to provide the oxygen component of the separation and distillation process. The functional differences between TALON and SAFTI systems can be delineated from Figures 31 and 26. As an example of aircraft interface requirements, Figure 32 depicts those required for a full-up C-17 system that produces high volumes of both LOX and LNEA. Bleed air and electric power are required in both commercial and military systems with the military demands far and above those for commercial use. From a volume and weight point of view, the TALON system for the C-17 is approximately 2 ½ times that of a SAFTI system for commercial use. This is quite understandable because of the significant differences between their operational requirements and the fact that the SAFTI system is not required to provide oxygen.

As with the introduction of all new technologies, there are some people who will respond with the usual knee-jerk reaction to something that infringes on their comfort zone, advocates a radical change in their conventional wisdom or threatens the tried and true ways things have been always been done since “yester-year.”

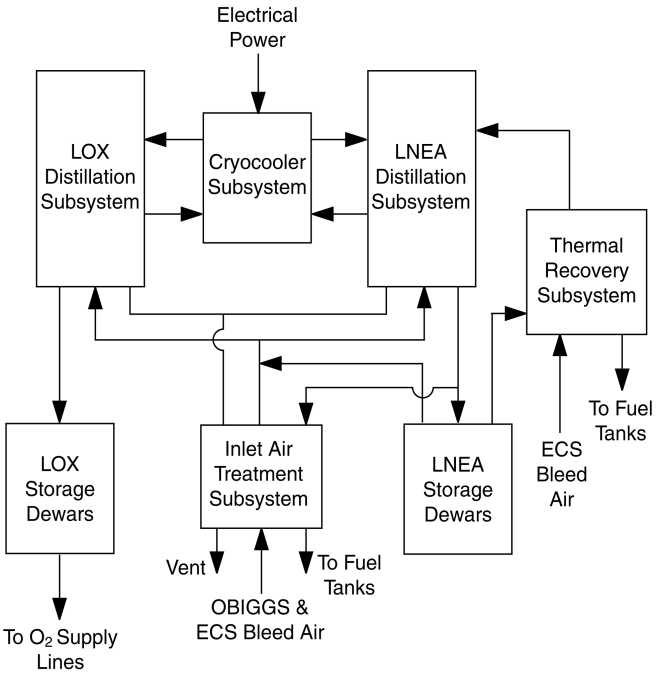

Figure 30. TALON System Description

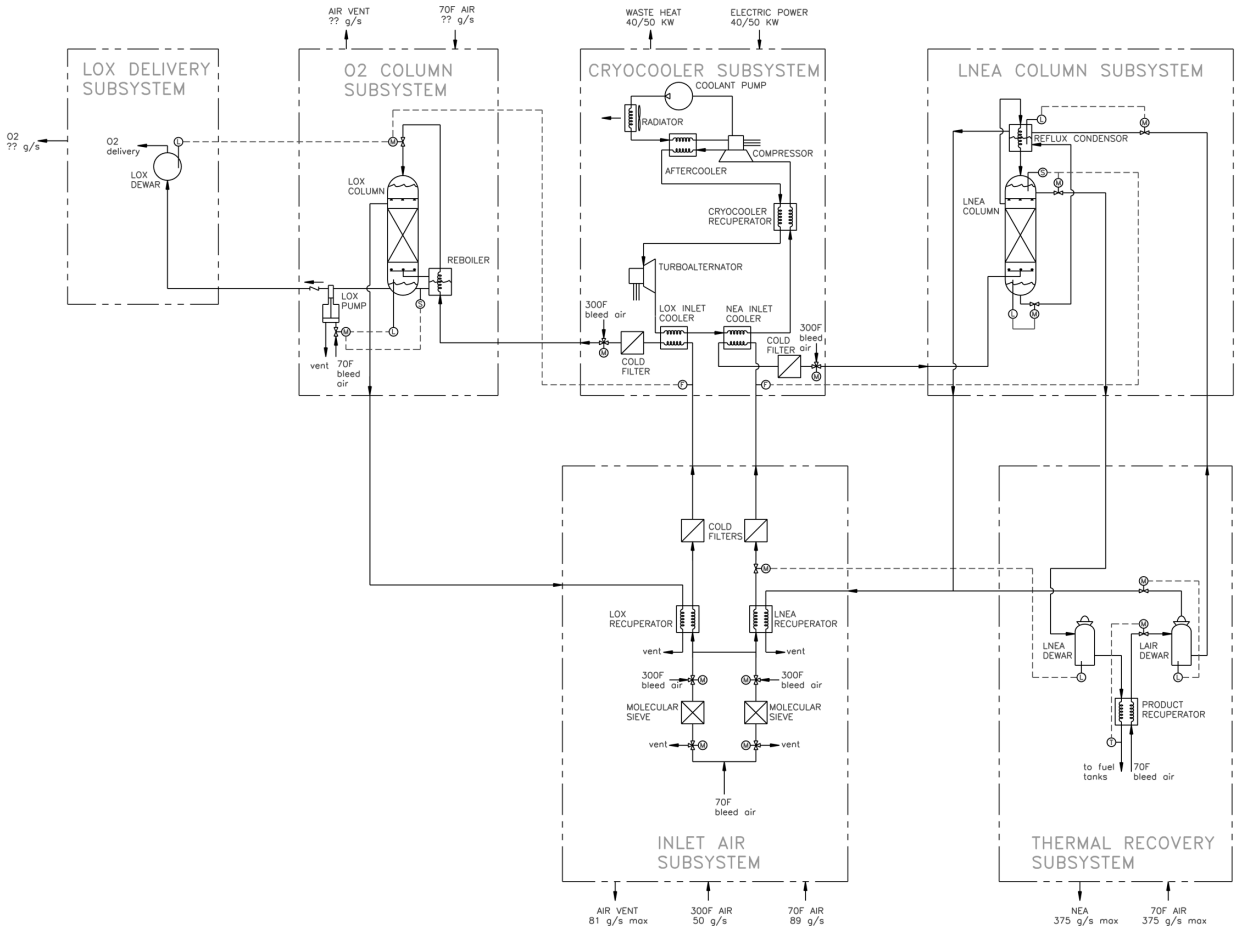

Figure 31. TALON Subsystem Grouping Schematic

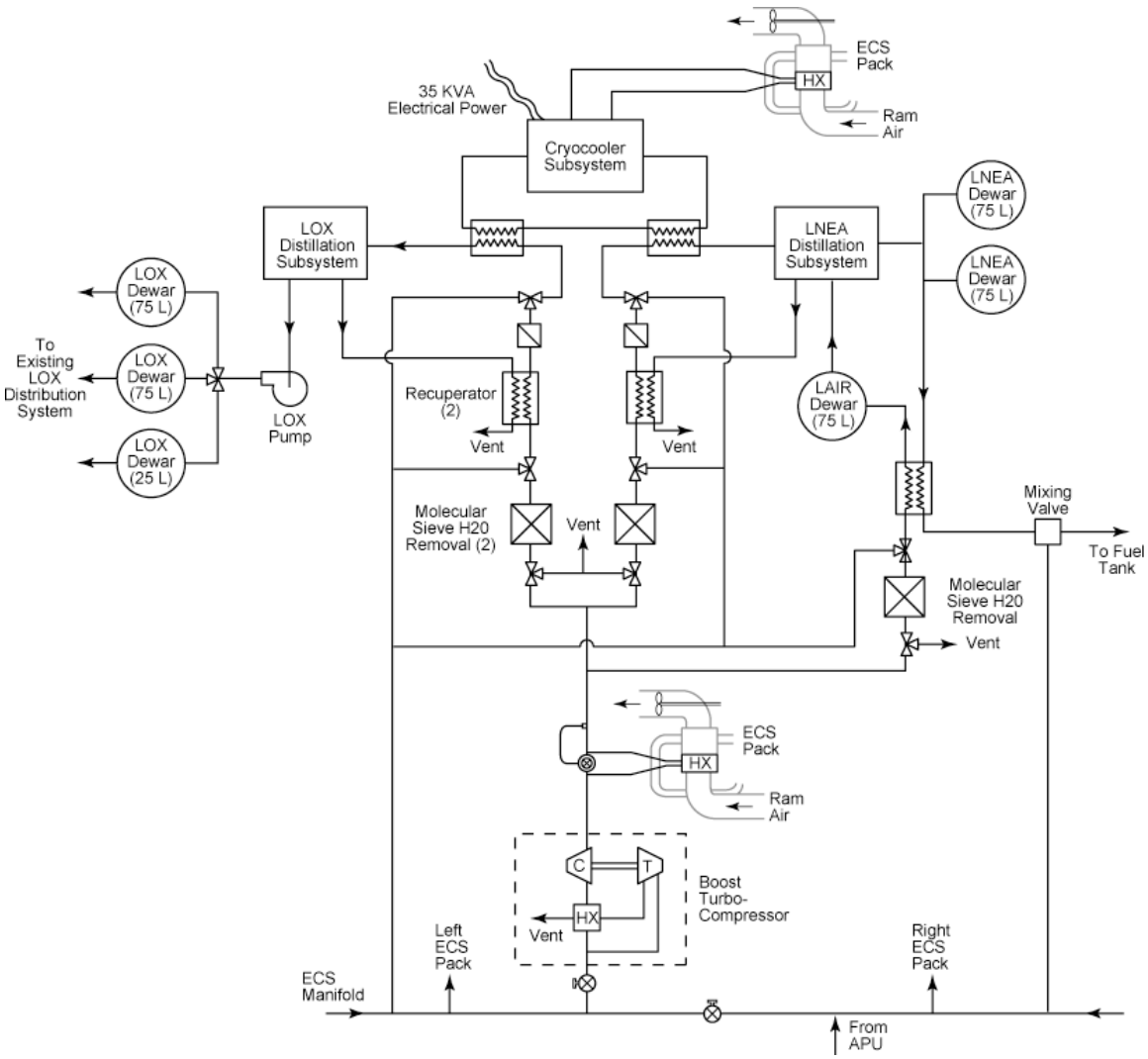

Figure 32. C-17 Aircraft Interfaces

In time of rapid technical change and advancement one needs to take a step back and take an objective look "out of the box." It is obvious the gas separation technologies are confronting the conventional wisdom of commercial aviation with new challenges, challenges which demand and sometimes dictate a totally new approach to problem solving. We believe that this may be the case with fuel tank inerting and the likelihood for regulatory activities that may require some of the very technologies discussed in the body of this report.

From a packaging point of view, as well as giving due consideration to the operational and maintenance costs of these systems, perhaps it is time to take a fresh (out of the box) look at how the impact of a regulation requiring fuel tank inerting can be offset with no compromise in the levels of safety expected by the flying public or required by law.

All of the technologies discussed in this report have inherent disadvantages: electrical power demands, bleed air demands, operational constraints of the respective systems, startup time, require compressors, etc. All will take up valuable space on an aircraft and with system weight will add to fuel burn and maintenance and a myriad of other considerations. None of these

technologies, save one, provide the opportunity to replace or revise any of the existing systems on aircraft, except TALON. TALON has the unique capability to produce and store both LNEA for fuel tank inerting and LOX for emergency use by passengers and crew.

A comprehensive study, and more out of the box thinking needs to be further explored to take best advantage of the TALON technology. In new large airplanes or in new derivatives of the 747-400, TALON affords the opportunity to replace existing heavy gaseous oxygen systems with a much smaller and lighter LOX system, a technology that has been used with great success for many years in the military services. If a nitrogen inerting system is mandated, perhaps the industry should rethink its emergency oxygen requirements and assess the merits of changing the oxygen systems as well.

Current gaseous oxygen systems are heavy and occupy a lot of packaging real estate in the aircraft. These systems have a minimum dispatch operating pressure of 1850 psi. When the crew or passenger system falls below this minimum level, maintenance crews change out the 1.5 cu ft. 3hT bottles until the system pressure is above 1850 psi. There is a tremendous logistics trail associated with these bottles, both filled and empty.

The filled bottles must be transported to line stations, stocked and maintained and empty bottles returned for refilling. Under DOT regulations each bottle must be hydrostatically tested every 3 years to avoid pneumatic hazards from developing. There have been some instances of fires caused by improper handling and maintenance of oxygen systems that have resulted in hull loss and injury. Oxygen fed fires will burn intensely and will consume virtually any material in the flame area. High pressure bottles pose a potential pneumatic hazard hence the requirement for periodic testing.

Cryogenic LOX can be stored in insulated tanks (called dewars) at much lower pressure than compressed gas, 250 psi vrs. 2000 psi. When LOX is vented and heated, each liter of LOX will produce 860 liters of 100% pure oxygen. A 3hT bottle of compressed oxygen will expand to 3200 liters of gas. If 1 cubic feet of LOX (42.5 liters) stored in a 3hT size bottle, the LOX could expand into 36,560 liters of O_2, a factor of 10 times more than compressed gas storage.

This would transcribe into lighter weight oxygen systems that could offset some of the weight imposed by having to carry an inerting system for the fuel tanks.

IX. TECHNOLOGY READINESS

A. ASSESSMENT OF EACH TECHNOLOGY

Of all the companies visited and interviewed during the course of this study, Litton Life Support was by far the most experienced in providing both OBIGGS and OBOGS systems to the military forces. Litton LS maintains over a 90% market share in OBOGS systems and in excess of a 98% market share in OBIGGS systems.

Their systems have been installed in a wide variety of military aircraft manufactured around the world. This also includes rotorcraft, turboprop and jet aircraft and transports. Figure 33 illustrates

the number of different types of systems installed. Litton LS has been developing OBOGS systems since 1967 and the first molecular sieves were installed for flight testing in 1975, Figure 34.

(38) Test A/C - (24) Production A/C

- 1967-70 Oxygen generation technology R&D
- 1971-75 Molecular sieve technology R&D
- 1975 OV-1D OBOGS flight tests (1)
- 1976 EA-6B OBOGS flight tests (2)
- 1979 OBIGGS ground demonstration
- 1980 AV-8A OBOGS flight tests (3)
- 1981 AH-64 OBIGGS Contract (4)
- 1982 AV-8B OBOGS Contract
- 1982 GR MK 5/7 OBOGS (Licensee) (5)
- 1982 F-16 OBOGS flight tests (6)
- 1982 Japan T-4 OBOGS (Licensee) (7)
- 1984 T-45 OBOGS Contract (8)
- 1985 CH-53 OBIGGS ground tests (9)
- 1985 IA-63 OBOGS flight tests (10)
- 1986 V-22 OBOGS/OBIGGS FSD Contract (11)
- 1986 YA-7F OBOGS flight tests (12)
- 1986 UH-60 OBOGS flight tests (13)
- 1986 UH-60A OBIGGS flight tests (14)
- 1986 CH-47 OBOGS flight tests (15)
- 1987 C-17 OBIGGS FSD Contract (16)
- 1987 Argentine A-4M OBOGS flight tests (17)
- 1988 Ger. Tornado OBOGS flight tests (Lic.) (18)
- 1989 F-15E OBOGS FSD contract (19)
- 1990 F-14 OBOGS Contract (20)
- 1990 F-18 OBOGS Contract (21)
- 1990 F-15E OBOGS Contract
- 1990 C-17 OBIGGS Production Contract
- 1992 UH-60Q Medevac OBOGS flight tests (22)
- 1992 Japan F-2 OBOGS (Licensee) (23)
- 1993 Czech L-139 OBOGS flight tests (24)
- 1993 Czech L-59T OBOGS Contract (25)
- 1993 Northrop/Emb JPATS OBOGS flight tests (26)
- 1993 Cessna JPATS OBOGS flight tests (27
- 1994 Zirconia Oxygen Monitor Contract
- 1994 V-22 OBOGS/OBIGGS EMD Contract
- 1995 F-16 OBOGS flight tests (28)
- 1995 Argentine A-4M OBOGS Contract
- 1996 JPATS OBOGS Contract (29)
- 1996 UH-60Q Medevac OBOGS Contract
- 1996 Pilatus PC-9 OBOGS Contract (30)
- 1994 V-22 OBOGS/OBIGGS Production Contract
- 1996 AH-1W OBIGGS flight test (31)
- 1997 Embraer ALX OBOGS Contract (32)
- 1998 F-16 OBOGS Contract
- 1998 MH-47E & MH-60K OBIGGS contract (33)
- 1999 C-130 OBOGS Contract (34)
- 1999 AH-1W OBIGGS Contract (35)
- 1999 UH-1N OBIGGS Contract (36)
- 1999 C-130 OBOGS Belgium (37)
- 1999 KTX-II OBOGS Development Contract (38)

Figure 33. OBIGGS and OBOGS Experience

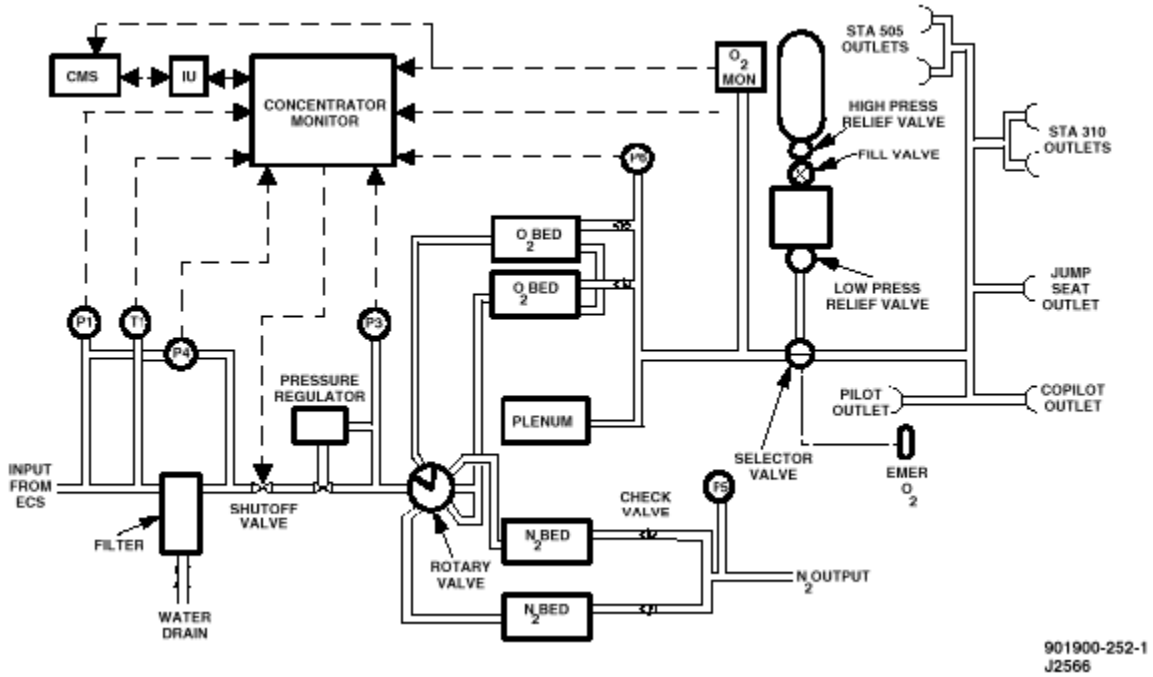

Figure 34. V-22 OBIGGS/OBOGS Schematic

These systems have been developed for specific use and applications, primarily smaller military aircraft such as fighters and helicopters. There has been limited experience by all companies with installing large capacity OBIGGS systems on large military transport aircraft. The most recent experience has been on the C-17, which is a PSA type system to produce NEA for fuel tank inerting. This system has not proved to be successful in meeting the operational and tactical requirements of the aircraft. It also requires a hydraulic powered compressor to provide the air flow required by the PSA system. The compressor has proved to be very unreliable, in need of frequent replacement and repair.

The C-17 OBIGGS system is subsequently undergoing evaluation of a new system to replace the existing PSA system. Candidate technologies being considered are the HFM air separation ASMs and the TALON system for longer range development and replacement.

Neither the current PSA system nor the proposed HFM replacement systems will meet the requirement for oxygen. LOX must still be loaded on board the aircraft in dewars to meet the crew and passenger (paratroop) requirements. The TALON system, if fully developed will provide LNEA for the severe tactical descent fuel tank inerting requirement and LOX for oxygen for the aircraft crew and for special operations required of the aircraft.

B. SERVICE EXPERIENCE

Litton LS provides 90% of the worlds market in OBOGS systems and 98% of the market in OBIGGS systems, all over a broad range of military products. A typical OBIGGS/ OBOGS system produced by Litton LS for the V-22 has been included herein as typical of these type systems.

B.1 V-22 OBIGGS Summary

The Boeing V-22 OBIGGS/OBIGGS is designed by Litton Life Support to sustain ullage oxygen concentration to 9% or less by volume, *in all fuel tanks*, throughout a variety of mission profiles and including emergency descent. The V-22 Detail Specification provided the following fuel vapor inerting requirements, which drove the implementation of the current OBIGGS system:

> *"Fuel tank ullage space shall be inerted by gaseous nitrogen supplied by an onboard generating unit or other suitable means. In the event nitrogen inerting is used and the unit fails, the vent system shall provide pressure relief to the fuel cells."*

The Litton LS OBIGGS is incorporated on the V-22 as part of the OBIGGS/OBOGS systems. Oxygen enriched air for crew breathing is produced by the OBOGS and nitrogen enriched air (NEA) for fuel tank inerting is produced by the OBIGGS. Figure 34 is a detailed schematic of the V-22 OBIGGS/OBOGS systems. The schematic includes the OBIGGS implementation aboard the V-22 as well. OBIGGS provides NEA at pressures of 1-2 psig to each fuel tank during the entire mission. A closed ventilation system preserves the NEA content throughout these flight profiles. The system consists of zeolite molecular sieve air separation beds for generating NEA and a second set of beds (carbon) for concentrating O2, concentrator monitor, shutoff valve, input filter and drain, pressure regulator, a fixed flow restricting orifice, distribution tubes, and fuel tank check valves.

X. TRADEOFFS

In assessing trade-offs for each of the technologies presented and discussed in this report the end use of the product gas and operational requirements are the primary drivers in the selection of the system. Whether a system is required to produce oxygen for the crew of a fighter or military transport aircraft or for emergency descent as a result of sudden depressurization in a passenger jet aircraft will drive the need, quantity and purity of the oxygen gas required. Nitrogen gas, while not currently required in commercial aircraft, may become a requirement for inerting the fuel tanks in commercial airplanes in the near future. Military aircraft have a combat driven requirement to inert the fuel tanks as protection against ground fire. In both cases, the nitrogen gas produced will be injected/fed into the fuel tanks to lower the concentration of oxygen in the air, from 21% to as little as 9% to inhibit fires or explosions. As might be imagined, the amount of nitrogen gas concentration required and the time in which it is required differ in each case and are driven by considerations such a tank volume, venting, taxi and takeoff inerting requirements. For military aircraft it is tactical descents into a hostile combat environment, ground fire, and airborne fragmentation projectiles that dive the need to inert the fuel tanks to prevent fuel tank fires and explosions.

Each of the three principal technologies presented in this report has both positive and negative aspects, which are discussed and tabulated below. All of the technical approaches to gas separation require pre-treatment of the inlet air, whether in the form of hot engine bleed air or compressed cabin air, to remove contaminants, moisture, water, or solids. Tabulated performance tables and comparisons for each of the technologies have been collected and discussed in Section VII.

A. PRESSURE SWING ADSORPTION (PSA)

Air separation by PSA or molecular sieve systems, Figure 1, involve the adsorption and desorption of air, which is composed primarily of nitrogen (78.1%), oxygen (20.9%), argon (0.96%) and carbon dioxide (0.03%), on fixed beds of aluminum silicates (zeolites) utilizing a cyclic pressure variation to produce nearly pure nitrogen as a product gas. The zeolite compounds have an affinity for nitrogen. The remaining gas mixture composed primarily of approximately 95% oxygen and 5% argon becomes a waste or exhaust gas.

If the exhaust gases (oxygen and argon) are passed through a second PSA system that utilizes carbon as an adsorbent rather than zeolites, the argon gas molecules will be adsorbed and oxygen will be the product gas produced by the secondary process. The oxygen gas is greater than 99% pure and can be provided directly to a flight crew or passed through a compressor and “trickle charged” into a stored gas system Reference 6.

A third option, employed by the USAF for the AHOS-M project (Fig. 8), is to pass the gas through a cryocooler and store the gas as liquid oxygen, or LOX. This provides for a smaller, modular man portable system that can be deployed with field hospitals. The LOX is evaporated into pure medical oxygen gas for use by patients, battle casualties, and trauma victims.

The primary disadvantage of PSA systems is they require large amounts of high-pressure inlet air from either an engine or ground base supply (shop air) since the PSA’s separation effectiveness

is only 17%, as extracted from Table 9. and compressed air is very expensive on aircrafts. Furthermore, without secondary operations such as liquefaction or compressed gas storage capability, there would be no surge-load support. This means that a stand-alone PSA system would need to be maximum-sized to handle the largest flow rate contingency. The additional weight penalty could be significant. Nor are there heat generation or dissipation concerns.

B. HOLLOW FIBER MEMBRANE (HFM)

Hollow fiber membranes are hollow polymer fibers that are approximately the size of a human hair, on the order of 500 microns (Fig. 4). The fibers are coated with second polymer coating to seal surface defects. The hollow fiber provides the "structure for the selective coatings. The polymer coatings, a few hundred angstroms thick are at the technical limits for use in gas separation. The fibers are bundled; approximately 40 per strand, with numerous strands bundled into each module. The number of strands per module depends on the module size, as modules are available in 1, 2, 6, and 12 inch diameter modules, (Fig. 6). There are approximately 1.2 million fibers per 12 inch module, totaling 750 miles of length.

As with all of the gas separation technologies, HFM/ASM's requires inlet air pretreatment to remove contaminants and moisture. HFM's require high pressure bleed or shop air for operation. For example a 6 inch diameter ASM operating in the range of 100 psi requires 10.5 lbs/min feed air to produce 7.4 lbs/min NEA. See Section VII for performance comparisons. The purity of the product gas required drives the AMS size and flow requirements. ASM's do not have storage product gas storage capability unless a cryogenic cooling system or gas compressor is added to the product gas side of the system. It has the similar drawbacks of the PSA system requiring high-pressure bleed air and sizing for surge-loads. One outstanding feature of HFM/ASMs is the simplicity of the system; it requires a minimum number of parts.

C. CERAMIC MEMBRANES

Ceramic membrane is more accurately named the solid electrolyte oxygen separation (SEOS) system. The construction of the SEOS type systems have a solid silicon ceramic material, coated with a conductive layer required for establishing a voltage potential across the thickness of the membrane, (Fig. 7). A heater is required to elevate the temperature of the ceramic to the 650-750 deg.-C. From a reliability stand point SEOS systems are simple in design and lack complex valves and control systems. Once built the systems are inflexible, they produce the maximum amount of oxygen as designed. These systems do produce 100% pure oxygen gas. For a typical SEOS system to produce 2 liters per minute of 100% pure oxygen, the ceramic membranes would require approximately 210 watts at 13 volts and 32 amps of current. The oxygen gas is produced at 1500-2000 psi and once cooled can be introduced directly into a gaseous storage system or further cooled, passed through a cryocooler and stored cryogenically as 100% LOX.

Continued research into new material combinations has been producing improved efficiency in gas production with less and less power required per liter of gas produced.

Waste products are essentially very hot nitrogen and argon gases and is a safety concern. This will require the gases to be cooled and a method of safe disposal implemented, especially in aircraft operations. Inlet air pretreatment is required to assure the removal of water and moisture.

Contaminated dry air is not seen as a problem for ceramic separation because of the method of heating and ionizing the air should be sufficient to incinerate any particulate contaminants.

D. TOTAL ATMOSPHERIC LIQUEFACTION OF OXYGEN AND NITROGEN (TALON)

The TALON system designed by Creare, Inc. incorporated standard distillation technology for the separation of N_2 (LNEA) and O_2 for maximum product purity and yield at minimum inlet air flow rates and inlet pressure. TALON utilizes a closed cycle, Reverse-Brayton Cryocooler to drive the gas separation process and high-speed turbomachinery for expansion and compression of the gases. One significant advantage of the TALON system is that it can be designed to produce both N_2/LNEA or O_2 or just LNEA only. This latter system is known as Safe Aircraft Fuel Tank Inerting (SAFTI). A comparison of each system is illustrated in (Fig. 13). TALON is a more complex technology system than others, but is affords the distinct advantage of storing gas in liquid form. Having storage capability provides significant design flexibility, and for tradeoffs on system size, weight and output. The longer the time available to produce gases, the smaller the system can be if liquid storage is available to provide the gas during critical stages of flight. Storage also provides greater dispatch flexibility and "turn around time" for commercial flight operations. The ability to produce and store LOX has the potential to significantly reduce the weight of conventional high-pressure gaseous oxygen system in large commercial aircraft.

Stored cryogenics should afford safer systems in operation and maintenance, especially for oxygen systems, where contaminants introduced inadvertently have had disastrous results. Cryogens are typically stored in the 200-300 psi range as opposed to 1850-2200 psi for compressed gases.

XI. CONCLUSIONS

It is the opinion of the authors, based on the current state of the art for the technologies investigated, that none of the technologies except the Creare TALON and SAFTI cryogenic systems appear to be able to meet the requirements for full time fuel tank inerting of all fuel tanks, unless they have the ability for cryogenic storage capabilities that would be required to meet peak demand conditions.

Assuming that the fuel tanks will be required to be inert to <9% oxygen concentration before push back from the boarding gates will be allowed, existing on board systems will not have the bleed air or electrical power available that is required to operate the different systems available. The engines will not be operating at the boarding gates. In order to meet a "push back" inerting requirement alternate power and compressed air sources must be provided, or a nitrogen gas ground cart to "top off" the fuel tanks before pushback.

This latter point gives rise to the need and probable requirement that the aircraft will need to be equipped with on board systems, otherwise its operation is limited to those gates and airports with ground service capabilities. Any failure of a centralized ground cryogenic plant could have significant economic impact for all carriers operating from this particular airport as all airplanes would be grounded for revenue flights. In order to mitigate the high cost of implementing centralized cryogenic plants and/or ground service carts, and the potential for complete loss of an

airport from mechanical failure, weather or natural disaster, or from terrorists acts, on board systems seemingly offer the least overall system impact.

Before any system can be fully engineered for any airplane, an exact set of certification or performance standards must be specified. For example, requiring heated center fuel tanks to have an oxygen concentration of 9% or less prior to push back from the boarding gate, or requiring full time inerting to 10% oxygen concentration during all phases of flight are hard performance based design requirements. Flammability issues may also be considered in combination with performance based requirements which would allow different design approaches, again to qualify against performance based specifications.

From a technology maturity point, only the molecular sieves and hollow fiber membranes are off the shelf today. These are capable of producing O2 and N2 gases in the desired purity ranges. Whether these type technologies can produce the purity of gases at the volumes and pressures required without supplemental systems, i.e. compressors or cryogenic storage, again depends on design and performance requirements and operational limits of the aircraft.

New technologies such as ceramic membranes and gas liquefaction systems can produce virtually pure gases. In the case of ceramic membranes, 100% pure oxygen is produced by ion transport across the membranes at high temperatures. Cryogenic production and storage of gases as liquids offers additional flexibility through its inherent liquid storage capability. By introducing cryogenic cooling into a gas production system, the desired gas can be stored for subsequent use, i.e., LNEA for inerting at pushback. In the matter of oxygen required for emergency depressurization and descent, a large volume of gas is required very quickly which would preclude considering any system that would have “startup” lags to get up to desired performance. Cryogenic storage would eliminate startup lag by having a ready supply of gas stored as a liquid. The USAF Research Laboratory development of the AHOS-M medical oxygen system is a good example of combining gas separation and cryogenic cooling and storage of oxygen. Cryogenic liquids require much smaller volumetric space at significantly lower pressure for storage than high pressure compressed gases and have a much lower impact on maintenance and eliminate high pressure gas bottles logistics, inventory and pressure testing.

As aircraft increase in size and/or passenger capacity, route flexibility and aircraft utilization will become more important to these high value assets. Any technology that increases their operating performance or route flexibility should be given serious consideration as they will increase asset utilization and operations flexibility. A 600-800 passenger aircraft would require a very heavy emergency oxygen system, and if flying a trans-Himalayan would necessitate an even heavier compressed oxygen system to maintain required altitude during an emergency depressurization over extended periods. A cryogenic oxygen or LOX system would be significantly smaller and lighter weight, hence afford a lower fuel burn, than a comparable compressed gas system. One liter of LOX at 200 psi will expand to approximately 860 liters of oxygen gas whereas a 2000 psi compressed gas system will expand at 201:1.

Gas separation technology systems that can operate with a higher duty cycle can be sized smaller at a reduced output if the product gases are stored as liquids. Since there is not a continuous demand, rather peak demands such as at push back or in an unlikely emergency descent, the

gases can be generated at a much lower rate and stored to make up for usage. This eliminates the requirement for large quantities of electrical power and high pressure engine bleed to produce the product gases when the airplane is least able to provide it, i.e., while at the gate and taxi for takeoff.

Whereas LOX systems have been in common use in various military aircraft, they have not seen use in commercial aircraft outside of Air Force One. Use in commercial aviation will be a major departure from the more established and tradition design philosophy, more so that changing from compressed gas cylinders to chemically generated oxygen. But one none the less, cryogenic gas storage needs to be considered for future aircraft applications.

XII. REFERENCES

1. NASA Contract NAS1-20341, Statement of Work for Task 2 dated June 26, 2000.
2. Reynolds, T., Bailey, D., Lewinski, D., and Roseburg, C., NASA Contract NAS1-20341, Task Order 11, Task 1 OBIGGS/OBOGS Final Report on Aircraft Requirements, June 2000, NASA Contractor Report CR-210903.
3. Huggett, Clayton, "The Combustion of Materials in Oxygen-Helium and Oxygen-Nitrogen Atmospheres," USAF School of Medicine (AFCS), Brooks AFB, TX, June 1966.
4. Green, D.W. (ed.), Perry's Chemical Engineers' Handbook, 7th edition, New York: McGraw-Hill, 1997.
5. Miller, G.W., Knaebel, K.S., and Ikels, K.G., Equilibrium of Nitrogen, Oxygen, Argon, and Air in Molecular Sieve 5A, AIChE Journal, Vol. 33, No. 2, February 1987.
6. Reynolds, T.L., "Improvements in Aircraft Passenger Safety: High Costs, Diminishing Returns," Institute of Mechanical Engineers, Seminar on Interior Safety of Passenger Transport, London, England, November 12, 1992.
7. Bhat, P.V. and Beaver, E.R., Innovations in Nitrogen Inerting Using Membrane Systems, AIChE Symposium Series, Vol. 84, No. 261.
8. Mac Lean, D.L., Stookey, D.J., and Metzger, T.R., Fundamentals of Gas Permeation, HYDROCARBON PROCESSING, Houston: Gulf Publishing Co., August 1983.
9. Dyer, P.N., et al., Ion Transport membrane Technology for Oxygen Separation and Syngas Production, SOLID STATE IONICS, 134, 2000.
10. Journal Science, Oct. 6, 2000, "Influencing Structure in the Heart of Nanoland: Light Used to Control Size of Nanopores."
11. USAF Report AFFDL-78-66, Test and Evaluation of Halon 1301 and Nitrogen Inerting Against 23mm HEI Projectiles, C.L. Larson, May 1978.
12. USAA Report VRADCOM-TR-80-33, A Study of the Blast and Combustion Over-Pressure Characteristics of the 23mm High Explosive Incendiary – Tracer (HEI-T), Pedriani et al., November 1980.
13. Zinn, S.V., Inerted Fuel Tank Oxygen Concentration Requirements, Federal Aviation Administration, FAA-RD-71-42, August 1971.
14. WADG-TR-418, Inerting Conditions for Aircraft Fuel Tanks, Stewart et al., September 1955.
15. Drysdale, Dougal, An Introduction to Fire Dynamics, John Wiley and Sons.
16. Aviation Rulemaking Advisory Committee (ARAC), Fuel Tank Harmonization Working Group, Task Group 3-Fuel Tank Inerting, Final Report, July 1998.

17. Reinhardt, J.W., Blake, D., Marker, T., “Development of a Minimum Performance Standard for Aircraft Cargo Compartment Fire Suppression Systems,” Federal Aviation Administration, Report DOT/FAA/AR-00/28, 28 Sept. 2000.
18. Eklund, Dr. Thor I., “Estimated Detection System False Alarms from Cargo Compartment fire Extinguisher Discharge Statistics,” Federal Aviation Administration Report, DOT/FAA/AR-TN96/56, May 1996.
19. Reynolds, T.L., Grimstad, G.E., and Anderson, C.D., “Aircraft Command in Emergency Situations (ACES), Phase I-Concept Study,” Federal Aviation Administration Report DOT/FAA/CT-90/21, Prepared by Boeing Commercial Airplane Group, April 1991.
20. Abramowitz, A. and Boris, P., Characterization of an Oxygen/Nitrogen Permeable Membrane System, Federal Aviation Administration, DOT/FAA/AR-95/91, April 1996.

XIII. BIOGRAPHIES OF AUTHORS

Thomas L. Reynolds

Tom is an Associate Technical Fellow in Boeing Seattle Phantom Works, Air Vehicle Systems Technology. Tom received his BS in Engineering and Science from Seattle University in 1972 and a Masters of Engineering from the Engineering Executive Program at the Univ. of California-Los Angeles in 1977. He has been a responsible proposal and program manager for advanced technology project developments and contract studies with the NSA, CIA, NASA, FAA, USAF, and US Navy. These projects have encompassed a broad range of technologies and systems. Tom has written and presented 12 technical papers on aviation safety, a number of which have been published. He is internationally recognized for his work in the area of passenger cabin safety and in 1992 was Chairman of the AIA Committee that published the Industry Position Paper on water mist systems for post crash fire protection. Tom has been a Boeing employee for 25 years in several capacities: Manager of Technology and Product Development, Payload Systems Manger, Project Engineer, Overseas Field Representative, Manufacturing Research Engineer, and avionics systems engineer. For the past 21/2 years has been the Boeing Program Manager responsible for the NASA Aviation Safety Program contract studies in gas separation technology research.

Tom is the Chairman for the 60th Anniversary Reunion of the American Volunteer Group/Flying Tigers and an Executive Board Member of the Sino-American Aviation Heritage Foundation involved with the underwater recovery of a Flying Tiger's P-40 in Kunming China.

Dr. Thor I. Eklund

Thor I. Eklund is an aerospace engineering consultant specializing in aircraft fire protection. He received his B.S.E. in Aerospace and Mechanical Engineering from Princeton University and his M.Sc. and Ph.D. from Brown University. He is presently a Boeing approved consultant. Other recent clients include the National Research Council and the Institute for Defense Analyses. Dr. Eklund is a co-lecturer at the annual Aircraft Fire Protection/Mishap Investigation Course given by AFP Associates. He played a pivotal role in many fire safety research programs, sensor and detection technology development projects, and regulatory initiatives while at the Federal Aviation Administration. He had previously done research and engineering on fuels and fire topics at the Naval Air Propulsion Test Center, Arthur D. Little, and EXXON. Dr. Eklund has published some three dozen reports and journal articles, holds a number of patents on airplane fire safety devices, and continues to lecture at professional meetings on research developments in aircraft fuel safety, fire resistant materials, and fire management. He is a member of AIAA, ASME, and SAE.

Greg Haack

Greg Haack is a graduate of California State Polytechnic University, Pomona, earning a BS in Aerospace Engineering in 1978. He joined McDonnell-Douglas in September, 1978 and has spent his career working on aircraft fuel systems. Greg was involved in the DC-10 and KC-10 fuel system certifications and lead the fuel system analytical team for the C-17 from 1984 to 1992. This was the first large aircraft to incorporate OBIGGS for fuel tank inerting. Greg has been involved in several airplane certification programs for fuel systems including certification under harmonized FAR/JAR requirements. He lead the Inerting Team during the 1998 Fuel Tank Harmonization Working Group under the auspices of the FAA's Aviation Rulemaking Advisory Committee (ARAC). He simultaneously participated in the Fuel Tank System Safety Team which was concerned with investigating fuel tank ignition sources. He currently leads the Onboard Design Team for the Fuel Tank Inerting Harmonization Working Group which is studying the feasibility of applying fuel tank inerting to commercial transports.

REPORT DOCUMENTATION PAGE

Form Approved
OMB No. 0704-0188

Public reporting burden for this collection of information is estimated to average 1 hour per response, including the time for reviewing instructions, searching existing data sources, gathering and maintaining the data needed, and completing and reviewing the collection of information. Send comments regarding this burden estimate or any other aspect of this collection of information, including suggestions for reducing this burden, to Washington Headquarters Services, Directorate for Information Operations and Reports, 1215 Jefferson Davis Highway, Suite 1204, Arlington, VA 22202-4302, and to the Office of Management and Budget, Paperwork Reduction Project (0704-0188), Washington, DC 20503.

1. AGENCY USE ONLY (*Leave blank*)

2. REPORT DATE
August 2001

3. REPORT TYPE AND DATES COVERED
Final Contractor Report

4. TITLE AND SUBTITLE
Onboard Inert Gas Generation System/Onboard Oxygen Gas Generation System (OBIGGS/OBOGS) Study
Part II: Gas Separation Technology—State of the Art

5. FUNDING NUMBERS
WU–728–50–20–00
NAS1–20341
Task 11

6. AUTHOR(S)
Thomas L. Reynolds, Thor I. Eklund, and Gregory A. Haack

7. PERFORMING ORGANIZATION NAME(S) AND ADDRESS(ES)
Boeing Phantom Works
Systems/Subsystems Technology
Seattle, Washington

8. PERFORMING ORGANIZATION REPORT NUMBER
E–12804

9. SPONSORING/MONITORING AGENCY NAME(S) AND ADDRESS(ES)
National Aeronautics and Space Administration
Washington, DC 20546–0001

10. SPONSORING/MONITORING AGENCY REPORT NUMBER
NASA CR—2001-210950
D950–10529–2

11. SUPPLEMENTARY NOTES
Project Manager, Clarence T. Chang, Turbomachinery and Propulsion Systems Division, NASA Glenn Research Center, organization code 5830, 216–433–8561.

12a. DISTRIBUTION/AVAILABILITY STATEMENT
Unclassified - Unlimited
Subject Category: 03 Distribution: Nonstandard
Available electronically at http://gltrs.grc.nasa.gov/GLTRS
This publication is available from the NASA Center for AeroSpace Information, 301–621–0390.

12b. DISTRIBUTION CODE

13. ABSTRACT ***(Maximum 200 words)***
This purpose of this contract study task was to investigate the State of the Art in Gas Separation Technologies utilized for separating air into both nitrogen and oxygen gases for potential applications on commercial aircraft. The intended applications included: nitrogen gas for fuel tank inerting, cargo compartment fire protection, and emergency oxygen for passenger and crew use in the event of loss of cabin pressure. The approach was to investigate three principle methods of gas separation: Hollow Fiber Membrane (HFM), Ceramic Membrane (CM), and liquefaction: Total Atmospheric Liquefaction of Oxygen and Nitrogen (TALON). Additional data on the performance of molecular sieve pressure swing adsorption (PSA) systems was also collected and discussed. Performance comparisons of these technologies are contained in the body of the report.

14. SUBJECT TERMS
Fire prevention; Fire protection; Fuels; Materials; Aviation safety; OBIGGS; OBOGS

15. NUMBER OF PAGES
73

16. PRICE CODE

17. SECURITY CLASSIFICATION OF REPORT
Unclassified

18. SECURITY CLASSIFICATION OF THIS PAGE
Unclassified

19. SECURITY CLASSIFICATION OF ABSTRACT
Unclassified

20. LIMITATION OF ABSTRACT